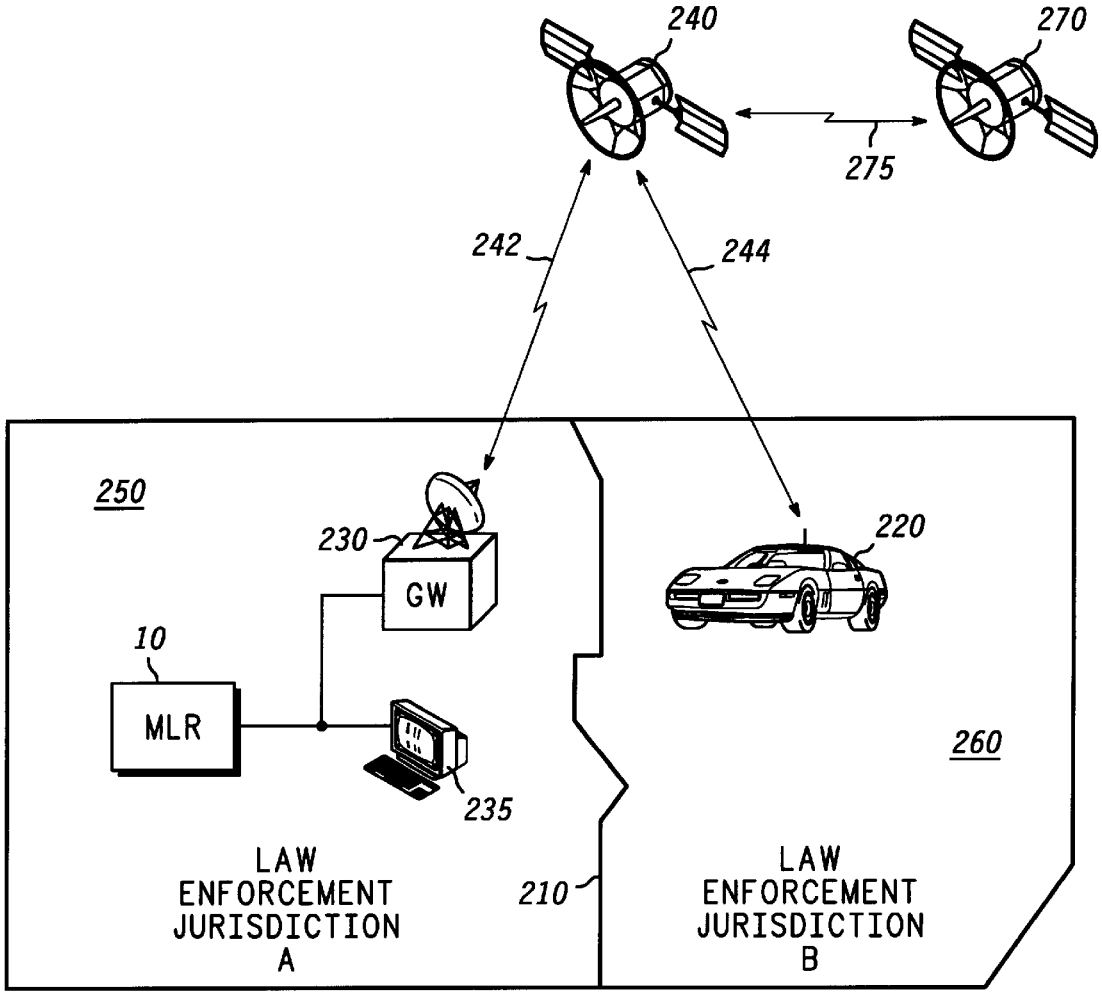
240
270
275
242
244
250
230
GW
220
10
MLR
260
235
LAW
ENFORCEMENT
JURISDICTION
A
210
LAW
ENFORCEMENT
JURISDICTION
B

FIG. 2

FIG. 3

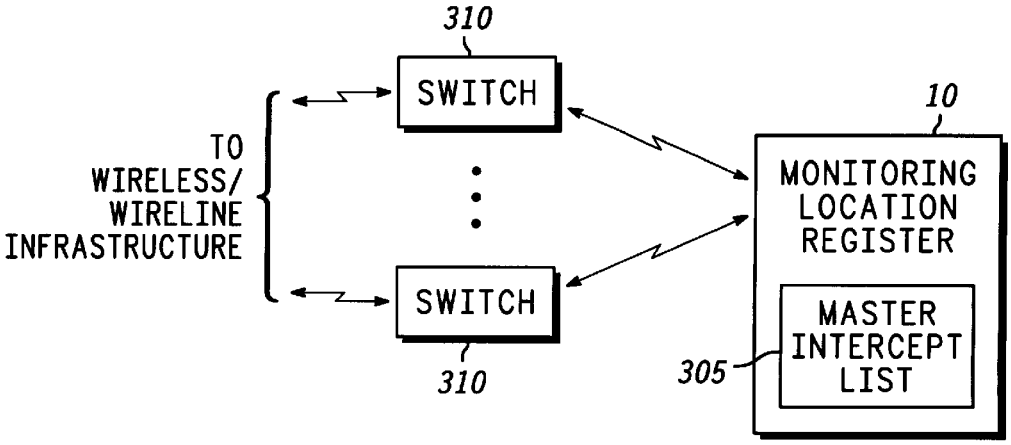
310
SWITCH
TO
WIRELESS/
WIRELINE
INFRASTRUCTURE
SWITCH
310
10
MONITORING
LOCATION
REGISTER
MASTER
INTERCEPT
LIST
305