US00D727732S

(12) United States Design Patent
Petty

(10) **Patent No.: US D727,732 S**
(45) **Date of Patent: ** Apr. 28, 2015**

(54) **BAKED GOODS BOX**

(71) Applicant: **Indiana Carton Company Inc**, Bremen, IN (US)

(72) Inventor: **James C. Petty**, Edwardsburg, MI (US)

(73) Assignee: **Indiana Carton Company, Inc.**, Bremen, IN (US)

(**) Term: **14 Years**

(21) Appl. No.: **29/466,595**

(22) Filed: **Sep. 10, 2013**

(51) **LOC (10) Cl.** **09-03**

(52) **U.S. Cl.**
USPC **D9/451**; D9/418

(58) **Field of Classification Search**
USPC D9/418, 414, 415, 676, 752, 721, 669, D9/622; D11/143; 229/162.2; D7/545, D7/538; 206/443
See application file for complete search history.

(56) **References Cited**

U.S. PATENT DOCUMENTS

D96,552	S	*	8/1935	Houghton	D11/143
5,516,038	A	*	5/1996	Zaccarini	229/162.2
D371,959	S	*	7/1996	Hupp	D9/676
D383,669	S	*	9/1997	Taylor	D9/669
D436,313	S	*	1/2001	Joshua et al.	D9/752
D466,406	S	*	12/2002	Solland	D9/418
D568,733	S	*	5/2008	DuBois et al.	D9/418
D574,230	S	*	8/2008	Bowman et al.	D9/418
D579,724	S	*	11/2008	McMurphy	D7/545
D592,075	S	*	5/2009	Holcomb	D9/721
D604,602	S	*	11/2009	Kohno	D9/418
D616,299	S	*	5/2010	Mayo	D9/418
D618,543	S	*	6/2010	Polaski et al.	D9/418
7,780,004	B2	*	8/2010	Carlozzi et al.	206/443
D671,401	S	*	11/2012	Grabes et al.	D9/418
D678,779	S	*	3/2013	Lee	D9/622
D679,950	S	*	4/2013	Cooper	D7/538

* cited by examiner

Primary Examiner — Ian Simmons
Assistant Examiner — Rhea Shields
(74) *Attorney, Agent, or Firm* — Botkin & Hall, LLP

(57) **CLAIM**

The ornamental design for a baked goods box, as shown and described.

DESCRIPTION

FIG. **1** is a perspective view of the baked goods box;
FIG. **2** is a top view of the box of FIG. **1**:
FIG. **3** is a front view of the box of FIG. **1**;
FIG. **4** is a back view of the box of FIG. **1**;
FIG. **5** is a bottom view of the box of FIG. **1**; and,
FIG. **6** is a left side view of the frame of FIG. **1**, the right side view being mirror symmetrical.
In FIG. **6** the broken line indicates a perforation and forms a part of the claim.
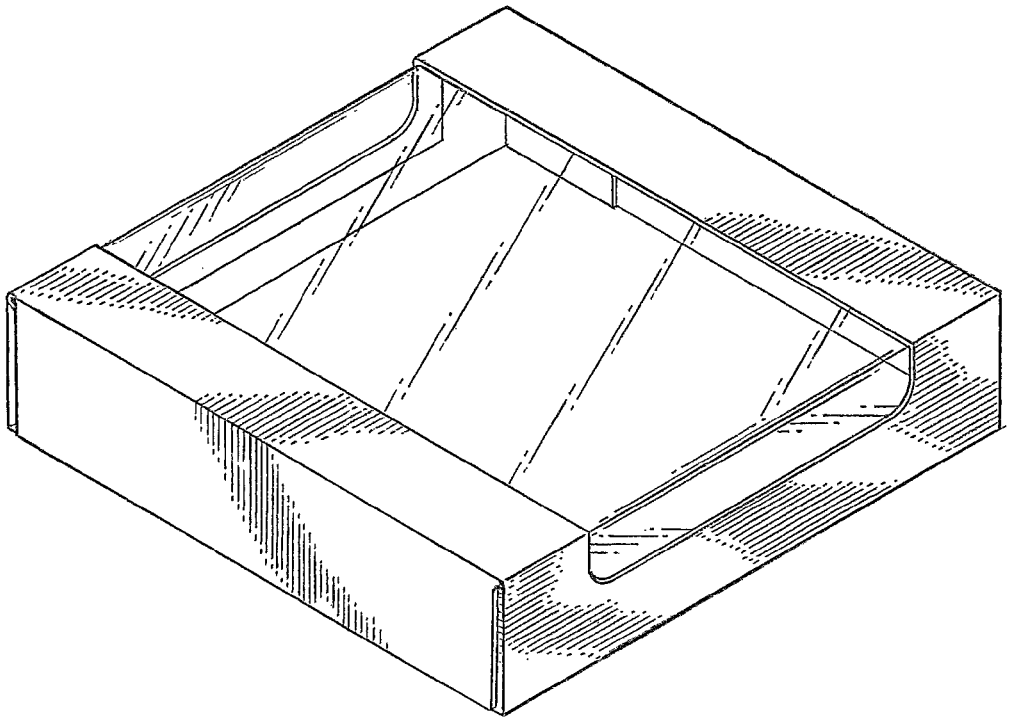
1 Claim, 2 Drawing Sheets