US006418932B2

(12) **United States Patent**
Paschal, Jr. et al.

(10) **Patent No.: US 6,418,932 B2**
(45) **Date of Patent: Jul. 16, 2002**

(54) **CONVERTIBLE PATIENT ISOLATION POD**

(75) Inventors: **Charles R. Paschal, Jr.**; **Orlando J. Illi**, both of Frederick, MD (US); **George W. Haubeil**, Front Royal, VA (US); **James R. Gauger**, Highland Park; **Robert L. Mullins, Jr.**, Hazel Crest, both of IL (US)

(73) Assignee: **The United States of America as Represented by the Secretary of the Army**, Washington, DC (US)

(*) Notice: Subject to any disclaimer, the term of this patent is extended or adjusted under 35 U.S.C. 154(b) by 0 days.

(21) Appl. No.: **09/780,569**

(22) Filed: **Feb. 12, 2001**

(Under 37 CFR 1.47)

Related U.S. Application Data

(60) Provisional application No. 60/181,464, filed on Feb. 10, 2000.

(51) **Int. Cl.**[7] **A61G 15/00**
(52) **U.S. Cl.** **128/845**; 600/21
(58) **Field of Search** 128/845, 846, 128/870; 600/21, 22; 135/128; 5/624, 625

(56) **References Cited**

U.S. PATENT DOCUMENTS

3,463,159	A	8/1969	Heimlich	128/350
4,664,660	A	5/1987	Goldberg et al.	604/321
5,342,121	A	8/1994	Koria	312/1
5,626,151	A	5/1997	Linden	128/897
5,728,041	A	3/1998	Fowler, Jr.	600/21
5,887,439	A	3/1999	Kotliar	62/78
5,950,625	A	9/1999	Bongiovanni et al.	128/845
5,975,081	A	11/1999	Hood et al.	128/845
6,001,057	A	12/1999	Bongiovanni et al.	600/21
6,003,728	A	12/1999	Elliott	222/81
6,241,653	B1	6/2001	Gauger et al.	600/21
6,321,764	B1	11/2001	Gauger et al.	

FOREIGN PATENT DOCUMENTS

GB	2 073 280 A	10/1981
WO	WO 00/38612 A2	7/2000
WO	WO 01/05348 A1	1/2001

OTHER PUBLICATIONS

Stefanek et al., "Emergency Personal Isolation and Containment (EPIC) System," Abstract for Telemedicine in the New Millennium: "Delivery the Promise," 1999.

Primary Examiner—Michael A. Brown
(74) *Attorney, Agent, or Firm*—Elizabeth Arwine

(57) **ABSTRACT**

A convertible isolation pod for an individual patient formed from sealable flexible plastic sheeting including an air intake grommet at the head end and an air exhaust grommet at the foot end of the pod each of the grommets being equipped with a Heimlich valve to provide unidirectional air flow within the pod where the air is filtered to remove contaminants.
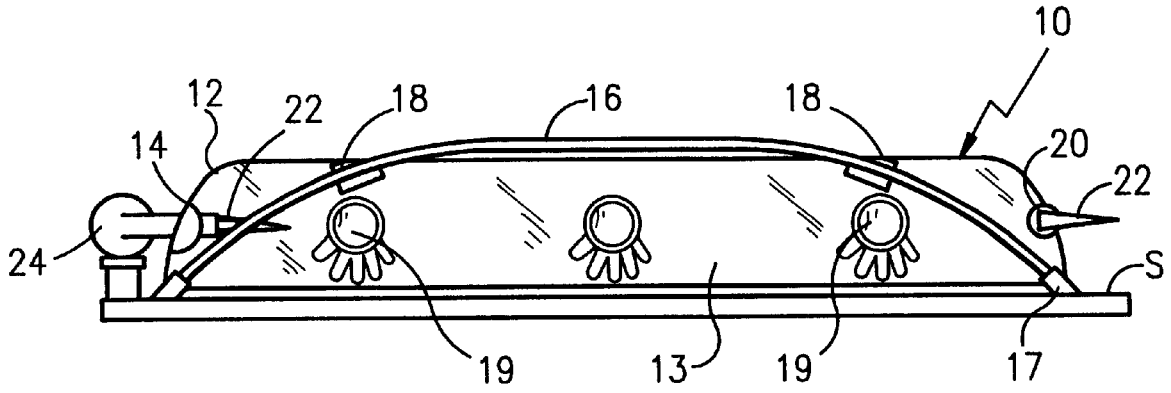
20 Claims, 1 Drawing Sheet