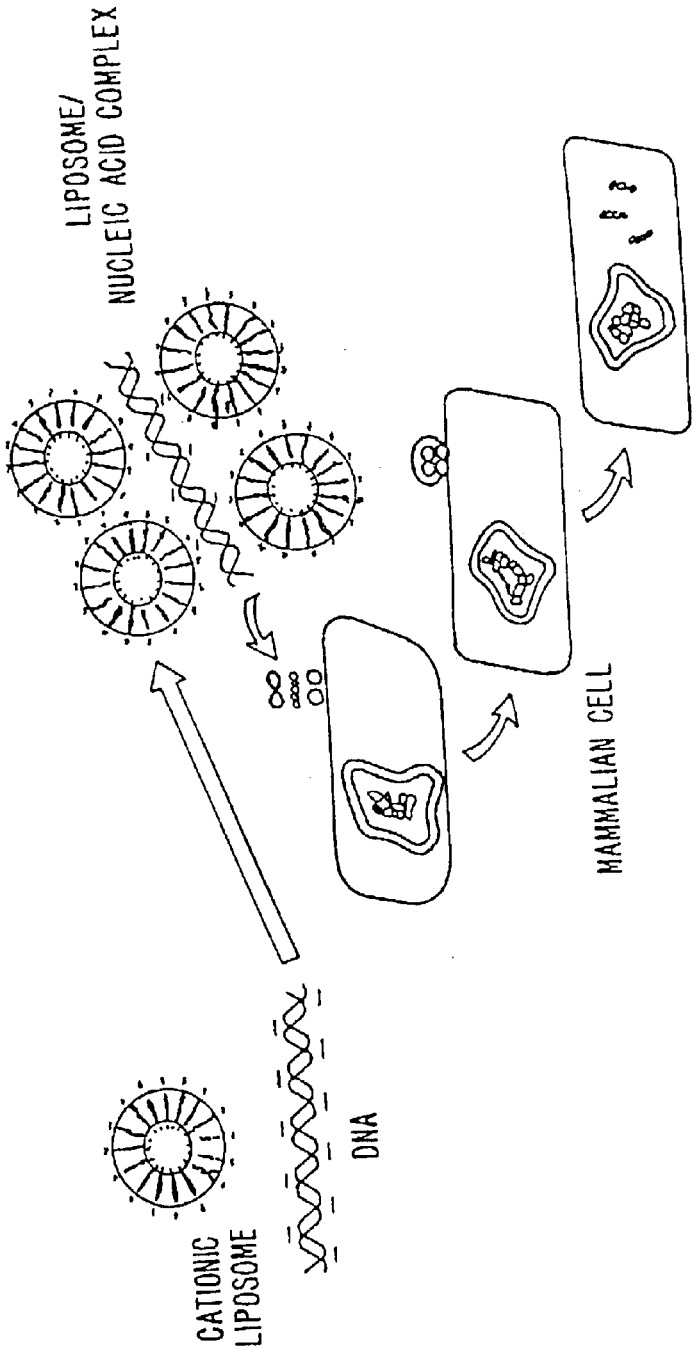
LIPOSOME/
NUCLEIC ACID COMPLEX
CATIONIC
LIPOSOME
DNA
MAMMALIAN CELL

FIG. 1.