US009409532B2

(12) **United States Patent**
Ksiezopolski

(10) **Patent No.: US 9,409,532 B2**
(45) **Date of Patent: Aug. 9, 2016**

(54) **EDGE SEAL WITH SIDEWALL SEAL**

(71) Applicant: **Lifetime Industries, Inc.**, Modesto, CA (US)

(72) Inventor: **Edwin E. Ksiezopolski**, Granger, IN (US)

(73) Assignee: **Lifetime Industries, Inc.**, Modesto, CA (US)

(*) Notice: Subject to any disclaimer, the term of this patent is extended or adjusted under 35 U.S.C. 154(b) by 0 days.

(21) Appl. No.: **14/672,982**

(22) Filed: **Mar. 30, 2015**

(65) **Prior Publication Data**

US 2015/0274093 A1 Oct. 1, 2015

Related U.S. Application Data

(63) Continuation of application No. 14/242,002, filed on Apr. 1, 2014, now Pat. No. 9,033,390.

(51) **Int. Cl.**
B60P 3/34 (2006.01)
B60R 13/06 (2006.01)

(52) **U.S. Cl.**
CPC . ***B60R 13/06*** (2013.01); ***B60P 3/34*** (2013.01); ***B60P 3/341*** (2013.01)

(58) **Field of Classification Search**
CPC B60P 3/34; F21Y 2103/00; B60J 10/0031; B60J 10/08; B60J 10/0062; Y10T 29/49622; B60R 13/06; E02F 9/163; E05Y 2900/518
USPC 296/26.13, 165, 171, 175, 26.11, 26.12, 296/164, 26.01, 26.09
See application file for complete search history.

(56) **References Cited**

U.S. PATENT DOCUMENTS

6,900,603 B1 * 5/2005 Del Vecchio G08C 17/02 318/16
6,966,590 B1 * 11/2005 Ksiezopolki B60P 3/34 296/165
7,540,116 B1 * 6/2009 Martinson B60P 3/34 277/644
8,408,625 B1 * 4/2013 Ksiezopolski B60P 3/34 296/171
8,701,351 B2 * 4/2014 Siegel B60R 13/06 277/649
2002/0043813 A1 * 4/2002 McManus B60P 3/34 296/26.13
2006/0091687 A1 * 5/2006 Schoffner B60P 3/34 296/26.01
2008/0048464 A1 * 2/2008 Ksiezopolski B60P 3/34 296/26.01
2008/0073925 A1 * 3/2008 Ksiezopolski B60P 3/34 296/26.01
2011/0025091 A1 * 2/2011 Schwindaman B60P 3/34 296/171
2012/0032406 A1 * 2/2012 Ksiezopolski B60J 10/00 277/648
2013/0106130 A1 * 5/2013 Yoder F16H 19/04 296/26.02
2013/0269262 A1 * 10/2013 Siegel B60R 13/08 49/492.1
2014/0001710 A1 * 1/2014 Siegel B60R 13/06 277/630
2014/0097578 A1 * 4/2014 Young F16J 15/027 277/628
2014/0175822 A1 * 6/2014 Kreil B60P 3/34 296/26.13
2014/0203522 A1 * 7/2014 Ksiezopolski F16J 15/027 277/634
2014/0225333 A1 * 8/2014 Siegel B60P 3/32 277/630
2015/0040700 A1 * 2/2015 Walls F16H 19/04 74/89.17

* cited by examiner

Primary Examiner — Kiran B Patel
(74) *Attorney, Agent, or Firm* — Botkin & Hall, LLP

(57) **ABSTRACT**

A resilient seal for mobile living quarters around a slide out room that includes a pair of mounting portions extending along the inside and outside surfaces of the main living area wall at an aperture through which the slide out room moves and further includes a connecting member extending between the attaching members and along the edge of the wall defining the aperture. The seal includes a flexible protrusion that can conform to an irregular surface or for accommodating walls of different thicknesses. A wiper seal extends from the connecting member to flex against the walls of the slide out room.
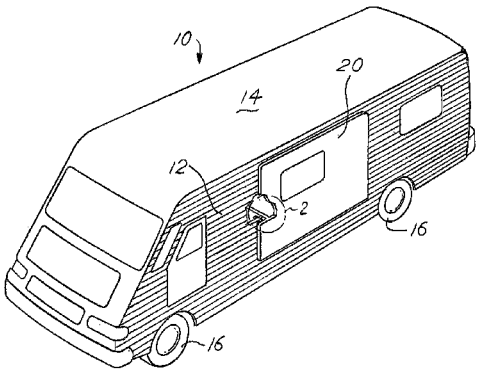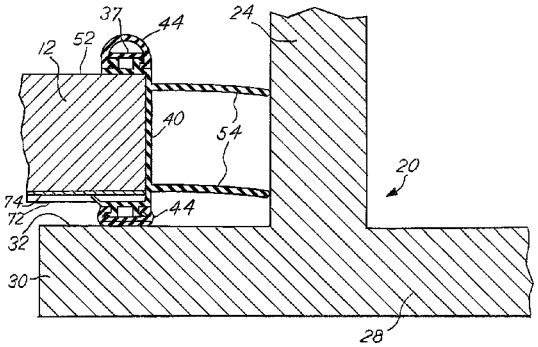
16 Claims, 4 Drawing Sheets