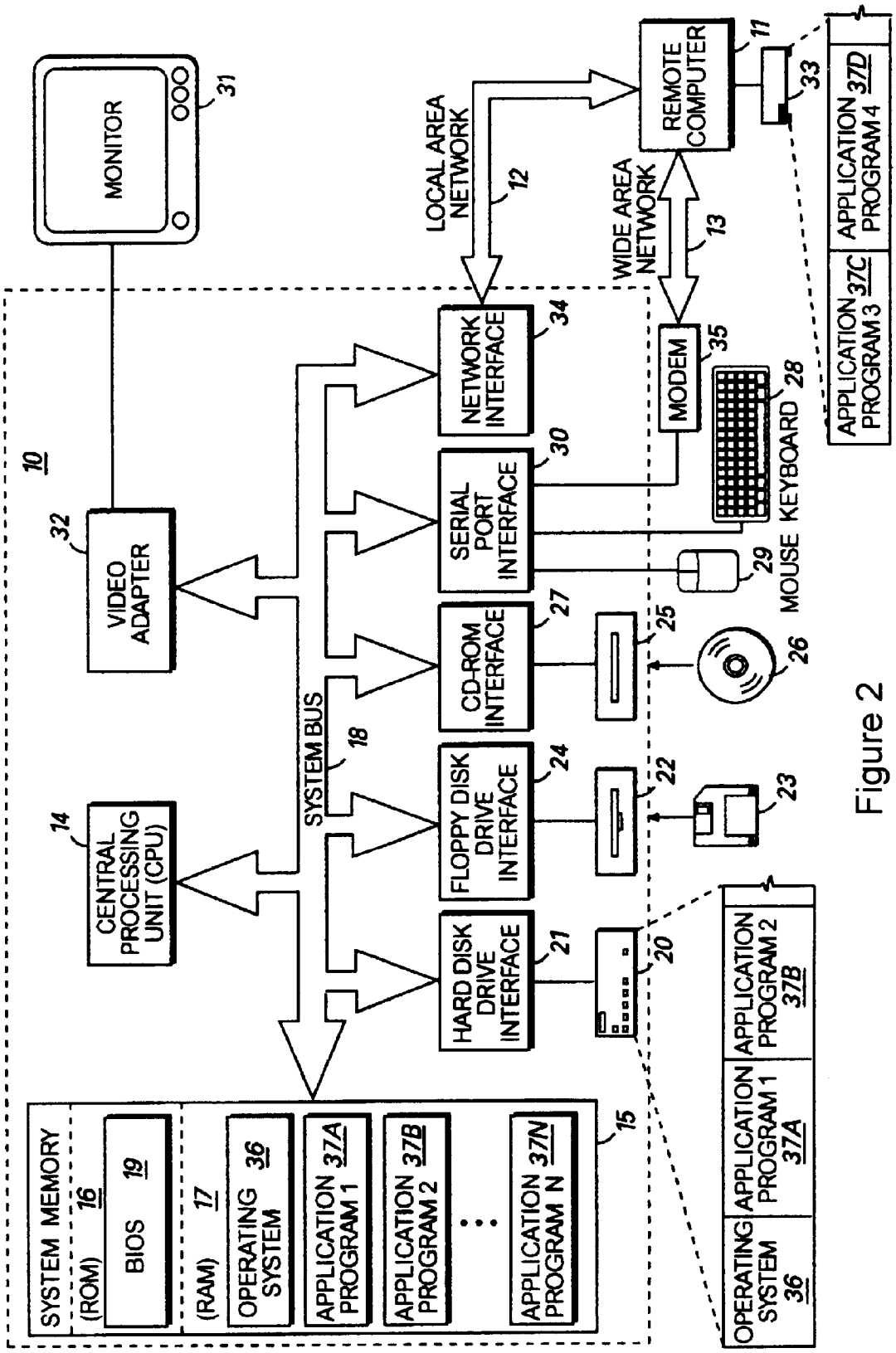
MONITOR
31
10
VIDEO ADAPTER
32
CENTRAL PROCESSING UNIT (CPU)
14
SYSTEM BUS
18
LOCAL AREA NETWORK
12
WIDE AREA NETWORK
13
REMOTE COMPUTER
11
33
NETWORK INTERFACE
34
SERIAL PORT INTERFACE
30
CD-ROM INTERFACE
27
FLOPPY DISK DRIVE INTERFACE
24
HARD DISK DRIVE INTERFACE
21
MODEM
35
KEYBOARD
28
MOUSE
29
25
26
22
23
20
SYSTEM MEMORY
(ROM) 16
BIOS 19
(RAM) 17
OPERATING SYSTEM 36
APPLICATION PROGRAM 1 37A
APPLICATION PROGRAM 2 37B
APPLICATION PROGRAM N 37N
15
OPERATING SYSTEM 36
APPLICATION PROGRAM 1 37A
APPLICATION PROGRAM 2 37B
APPLICATION PROGRAM 3 37C
APPLICATION PROGRAM 4 37D

Figure 2