US006704432B2

(12) **United States Patent**
Eversole et al.

(10) **Patent No.: US 6,704,432 B2**
(45) **Date of Patent: Mar. 9, 2004**

(54) **EXTENSIBLE FILE FORMAT**

(75) Inventors: **Adam Clyde Eversole**, Redmond, WA (US); **Benjamin Eric Ross**, Seattle, WA (US)

(73) Assignee: **Microsoft Corporation**, Redmond, WA (US)

(*) Notice: Subject to any disclaimer, the term of this patent is extended or adjusted under 35 U.S.C. 154(b) by 172 days.

(21) Appl. No.: **09/982,764**

(22) Filed: **Oct. 18, 2001**

(65) **Prior Publication Data**

US 2003/0076978 A1 Apr. 24, 2003

(51) **Int. Cl.**[7] **G06K 9/00**
(52) **U.S. Cl.** **382/100**; 713/176
(58) **Field of Search** 382/100, 112, 382/218, 219, 305, 366; 358/328, 403, 405; 380/54, 202, 210; 705/67; 713/176

(56) **References Cited**

U.S. PATENT DOCUMENTS

5,133,051 A		7/1992	Handley	715/514
5,367,698 A		11/1994	Webber et al.	709/203
5,530,759 A		6/1996	Braudaway et al.	380/54
5,878,434 A		3/1999	Draper et al.	707/202
5,881,287 A		3/1999	Mast	717/127
5,917,912 A		6/1999	Ginter et al.	713/187
5,933,842 A		8/1999	Ross	707/514
5,946,696 A		8/1999	Young	707/104
5,974,548 A		10/1999	Adams	713/200
5,991,771 A		11/1999	Falls et al.	707/202
6,044,155 A		3/2000	Thomlinson et al.	713/155
6,071,317 A		6/2000	Nagel	717/128
6,122,403 A	*	9/2000	Rhoads	382/233

OTHER PUBLICATIONS

PCT International Search Report for PCT/US02/33145.

* cited by examiner

Primary Examiner—Jayanti K. Patel
(74) *Attorney, Agent, or Firm*—King & Spalding LLP

(57) **ABSTRACT**

The present invention can provide an extensible file format compatible with previous, current, and future versions of an application program. The present invention can comprise including file version watermarks in an original data file of an application program. The file version watermarks can indicate various properties of the original data file. The file version watermarks can include a high version watermark, a last version watermark, a low version watermark, a creation version watermark, and an object version watermark. Each file version watermark can indicate changes, additions, or deletions made to the file. The present invention can use the file version watermarks to determine whether the file, or particular information in the file, corresponds to the previous, active, or future versions of an application program. Accordingly, the present invention can then load or save the original data file based on a result of the determination.
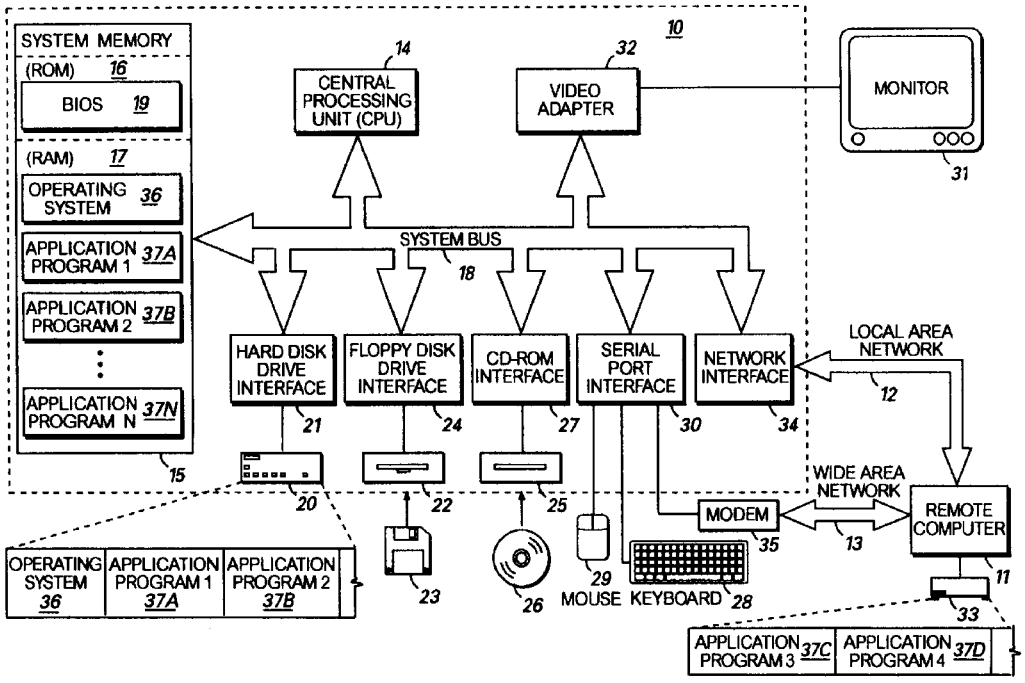
61 Claims, 8 Drawing Sheets