# United States Patent

**Doring**

[15] **3,702,032**

[45] **Nov. 7, 1972**


[54] **SOUND CARRIER AND REPRODUCING DEVICE FOR USE WITH INSTRUCTION BOOKS AND THE LIKE**


[72] Inventor: **Erich Doring,** La-Punt/Chamues-Ch 96, Switzerland



[22] Filed: **Jan. 13, 1971**

[21] Appl. No.: **106,201**

[30] **Foreign Application Priority Data**

Jan. 13, 1970 Germany.....P 20 01 283.3

[52] **U.S. Cl.** .....**35/8 A,** 274/42 R

[51] **Int. Cl.**.....**G09b 1/06,** G11b 3/68

[58] **Field of Search** .....35/8 A, 35 C; 40/125 A, 340; 274/42 R, 42 P, 43



[56] **References Cited**

UNITED STATES PATENTS

| | | | |
|---|---|---|---|
| 2,936,342 | 5/1960 | Kallmann | 35/35 C X |
| 2,822,425 | 2/1958 | Hicks | 35/8 A X |
| 3,461,583 | 8/1969 | Buck | 40/125 A |

FOREIGN PATENTS OR APPLICATIONS

| | | | |
|---|---|---|---|
| 341,146 | 1/1931 | Great Britain | 35/8 A |
| 860,111 | 2/1961 | Great Britain | 274/42 R |



*Primary Examiner*—Wm. H. Grieb

*Attorney*—Brenner, O'Brien, Guay & Connors



[57] **ABSTRACT**

A sound carrier is affixed where desired by the user onto a printed page of a book or the like and a sound reproducing unit is operatively engaged with the sound carrier by the user through the medium of visually locatable positioning means cooperatively carried by the sound carrier and the reproducing unit.

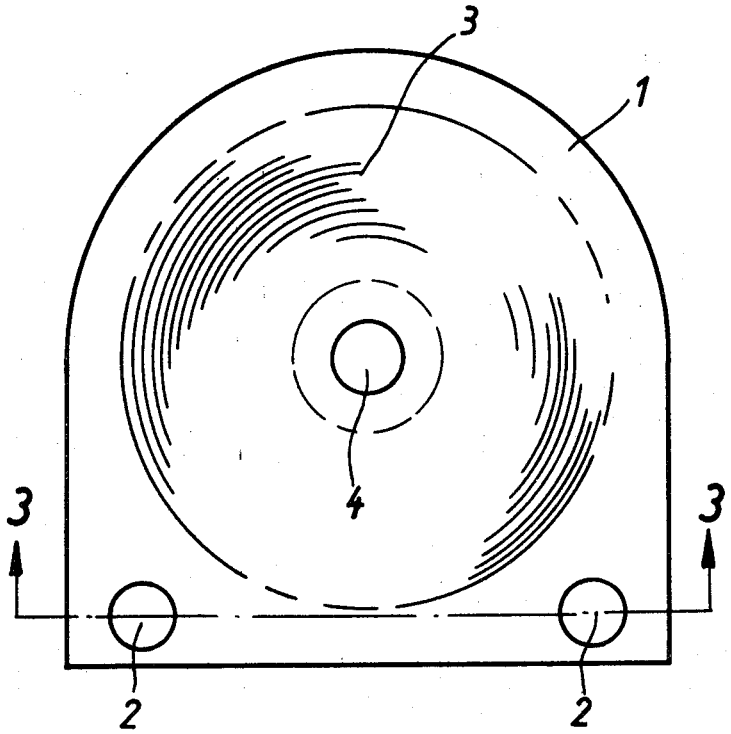
**2 Claims, 3 Drawing Figures**