US005396431A

United States Patent [19]

Shimizu et al.

[11] Patent Number: 5,396,431

[45] Date of Patent: Mar. 7, 1995

[54] NAVIGATION SYSTEM WITH POSITION MEASURING DEVICE AND AERIAL PHOTOGRAPHIC STORAGE CAPABILITY

[75] Inventors: **Toshihiko Shimizu**, Tokyo; **Morio Araki**, Kawagoe; **Takeharu Arakawa**, Kawagoe; **Kenichi Nobe**, Kawagoe, all of Japan

[73] Assignee: **Pioneer Electronic Corporation**, Tokyo, Japan

[21] Appl. No.: **962,976**

[22] Filed: **Oct. 16, 1992**

[30] **Foreign Application Priority Data**

Oct. 22, 1991 [JP] Japan 3-274343

[51] **Int. Cl.**[6] **G06F 15/50**

[52] **U.S. Cl.** **364/449**; 364/460; 364/450; 340/995; 342/457

[58] **Field of Search** 364/449, 450, 460; 340/995; 342/357, 457

[56] **References Cited**

U.S. PATENT DOCUMENTS

4,890,233	12/1989	Ando et al.	364/457
4,939,662	7/1990	Nimura et al.	364/449
4,943,925	7/1990	Morato et al.	364/449
4,954,959	9/1990	Moroto et al.	364/449
4,992,947	2/1991	Nimura et al.	364/444
5,031,104	7/1991	Ikeda et al.	364/449
5,115,398	5/1992	De Jong	364/443

OTHER PUBLICATIONS

Patent Abstracts of Japan vol. 11, No. 386 (P-647) 17 Dec. 1987 & JP-A-62 151 713 (Pioneer Electronic Corp.) 6 Jul. 1987 *abstract*.

Patent Abstracts of Japan vol. 13, No. 430 (P-937) 26 Sep. 1989 & JP-A-11 63 608 (Nec Home Electron Ltd) 27 Jun. 1989 *abstract*.

Primary Examiner—Michael Zanelli

Attorney, Agent, or Firm—Kane, Dalsimer, Sullivan, Kurucz, Levy, Eisele and Richard

[57] **ABSTRACT**

A navigation system is provided with: a position measuring device for measuring a current position of a movable body to which the navigation system is equipped; a storing device for storing aerial photograph data; a displaying device; and a display controlling device coupled to the position measuring device, the storing device, and the displaying device, for making the displaying device display a mark indicating the measured current position on an aerial photograph image on the basis of the measured current position and the stored aerial photograph data.
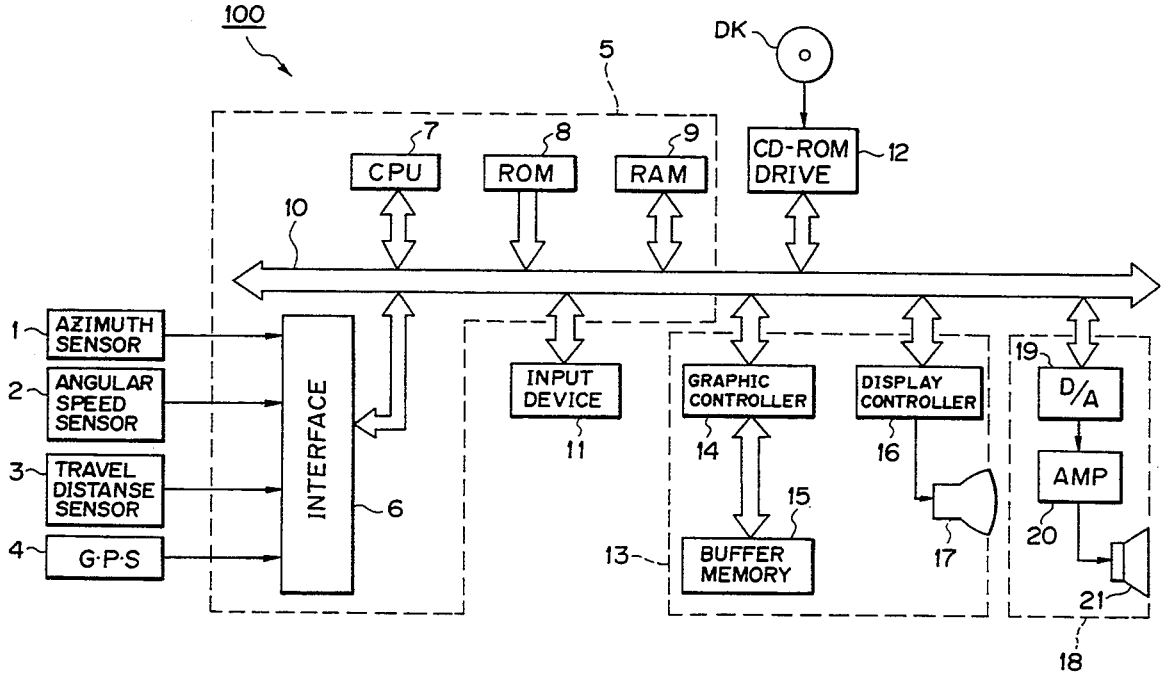
7 Claims, 6 Drawing Sheets