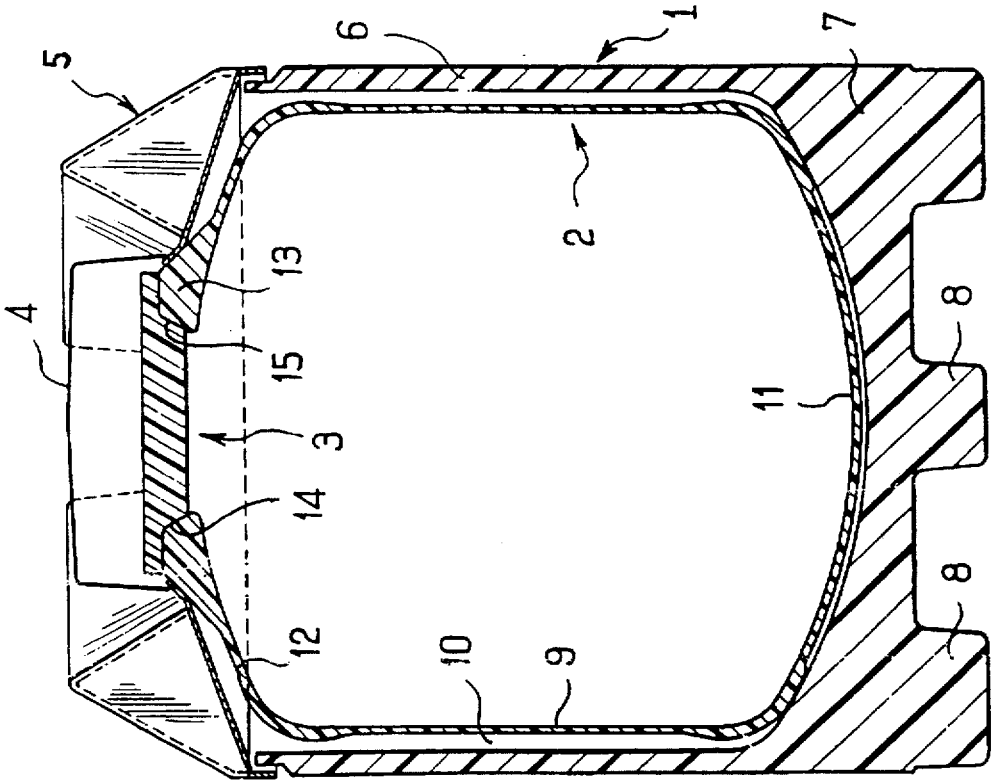

FIG_2

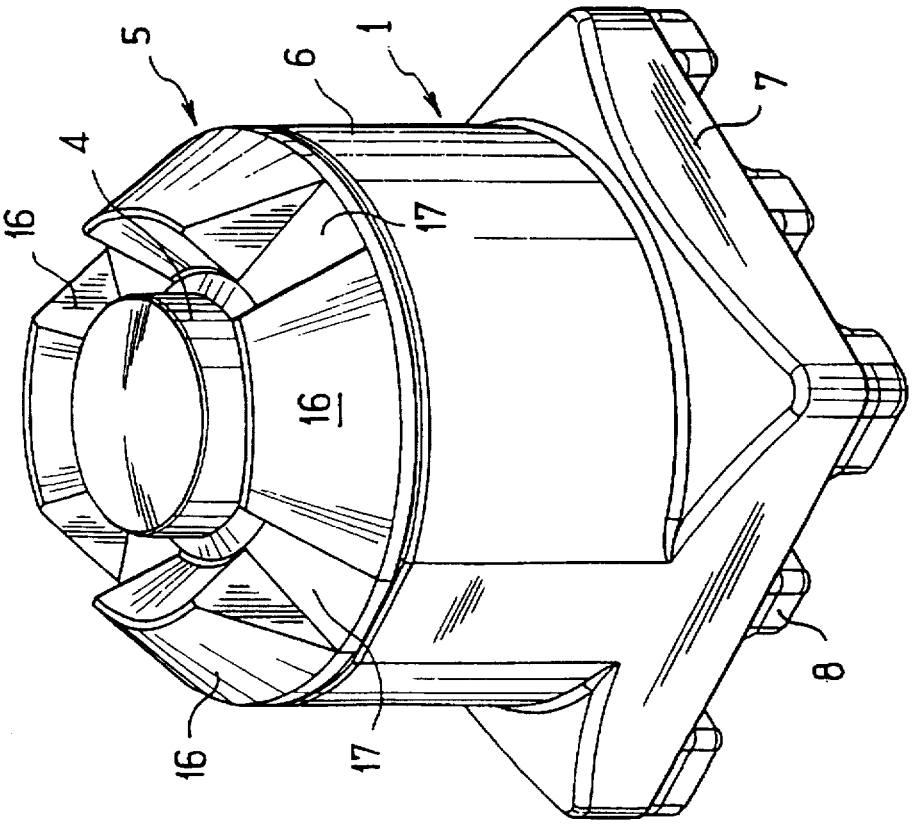

FIG_1