Nov. 18, 1930. B. L. WILHELM 1,782,331

LENS ATTACHMENT FOR EYES

Filed June 8, 1928

Fig. 1.

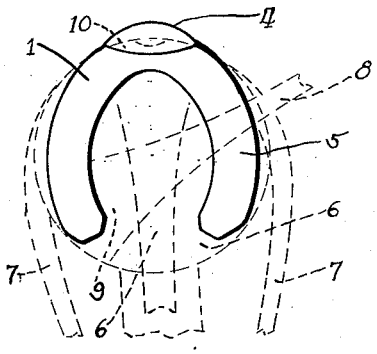

Fig. 2.

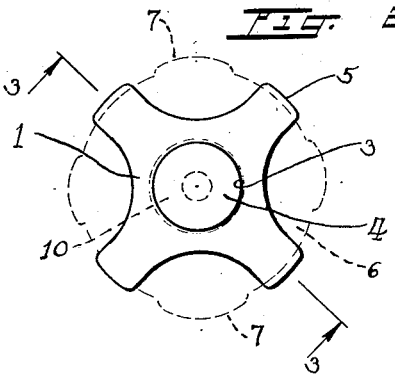

Fig. 3.

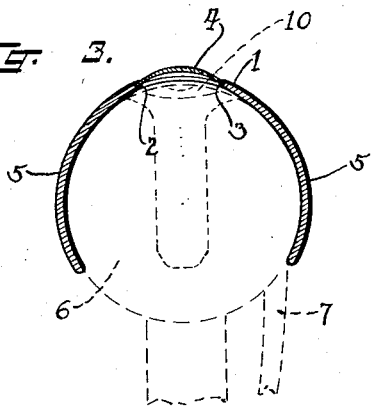

INVENTOR
B. L. Wilhelm
BY Munn & Co.
ATTORNEYS