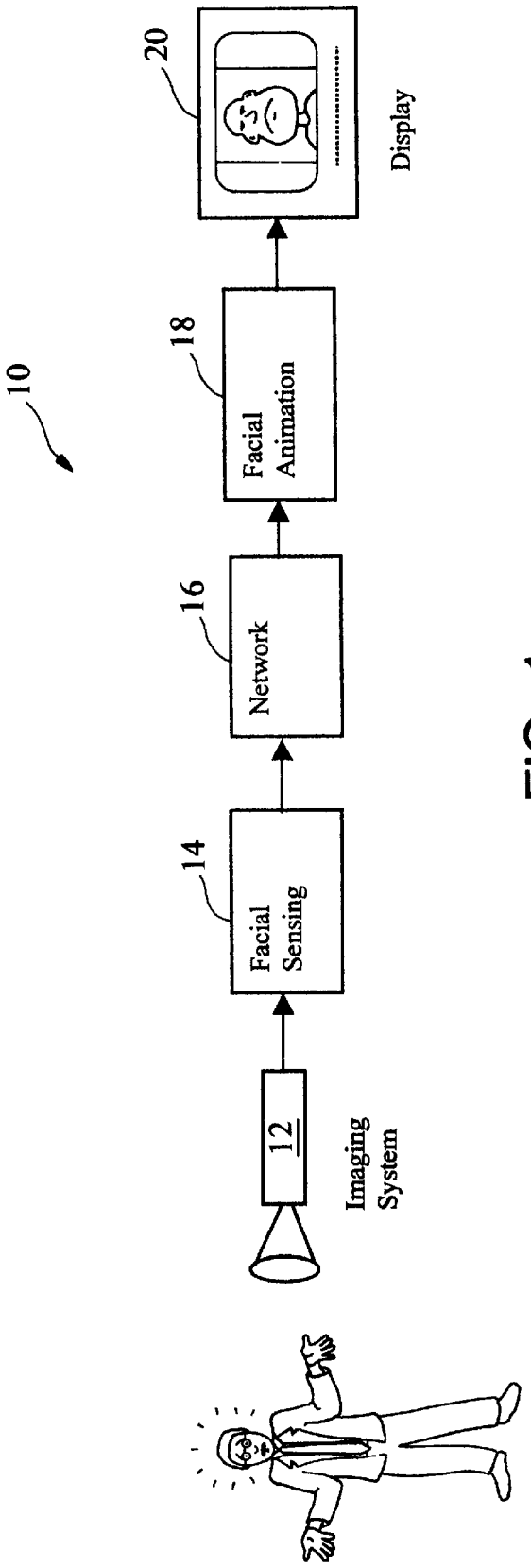
10
12
Imaging System
14
Facial Sensing
16
Network
18
Facial Animation
20
Display

FIG. 1