US008971031B2

(12) **United States Patent**
**Mok et al.**

(10) **Patent No.: US 8,971,031 B2**
(45) **Date of Patent: Mar. 3, 2015**

(54) **DISPLAY SYSTEM WITH A FLEXIBLE DISPLAY**

(75) Inventors: **Kwok Wah Mok**, Eindhoven (NL); **Noortje Grundlehner-Bos**, Eindhoven (NL); **Volker Barnhart Verschoor**, Eindhoven (NL); **Robert Sjang Josine van Dijk**, Eindhoven (NL); **Johannes Cornelis Adriaan Hamers**, Eindhoven (NL)

(73) Assignee: **Creator Technology B.V.**, Breda (NL)

( * ) Notice: Subject to any disclaimer, the term of this patent is extended or adjusted under 35 U.S.C. 154(b) by 97 days.

(21) Appl. No.: **13/569,080**

(22) Filed: **Aug. 7, 2012**

(65) **Prior Publication Data**

US 2014/0042293 A1 Feb. 13, 2014

(51) **Int. Cl.**
***G06F 5/00*** (2006.01)

(52) **U.S. Cl.**
USPC ..... **361/679.27**; 349/58

(58) **Field of Classification Search**
USPC ..... 361/679.3, 679.27; 349/58
See application file for complete search history.

(56) **References Cited**

U.S. PATENT DOCUMENTS

6,377,324 B1 * 4/2002 Katsura ..... 349/58
6,577,496 B1 * 6/2003 Gioscia et al. ..... 361/679.3
8,379,378 B2 * 2/2013 Visser et al. ..... 361/679.27
8,599,546 B2 * 12/2013 Nagasaki ..... 361/679.27
8,605,421 B2 * 12/2013 Verschoor et al. ..... 361/679.3
2005/0122671 A1 * 6/2005 Homer ..... 361/681
2006/0146488 A1 * 7/2006 Kimmel ..... 361/681
2008/0232043 A1 * 9/2008 Wang ..... 361/680
2010/0164837 A1 * 7/2010 Kao et al. ..... 345/1.3
2010/0246103 A1 * 9/2010 Visser et al. ..... 361/679.01
2013/0021762 A1 * 1/2013 Van Dijk et al. ..... 361/749
2013/0037228 A1 * 2/2013 Verschoor et al. ..... 160/377
2013/0044410 A1 * 2/2013 Verschoor et al. ..... 361/679.01
2013/0342094 A1 * 12/2013 Walters et al. ..... 312/319.2
2014/0029190 A1 * 1/2014 Sato et al. ..... 361/679.27

FOREIGN PATENT DOCUMENTS

WO WO 2008/054206 A2 5/2008

* cited by examiner

*Primary Examiner* — Bradley Duckworth

(57) **ABSTRACT**

A display system includes a continuous flexible display, and two main display supports, hingeable with respect to each other and each structurally configured to support a respective portion of the flexible display. The two main display supports are rotatable in opposite directions connected to each other by a respective hinge of a hinge mechanism. The main display supports are rotatable between a configuration for fixing the flexible display in a closed storage position and a planar configuration for fixing the flexible display in an open position. The two main display supports are coupled with each other by a movement synchronizing coupling enabling during movement between the closed and open position a mutual substantially synchronized rotating of the main display supports at substantially equal but opposite angles.
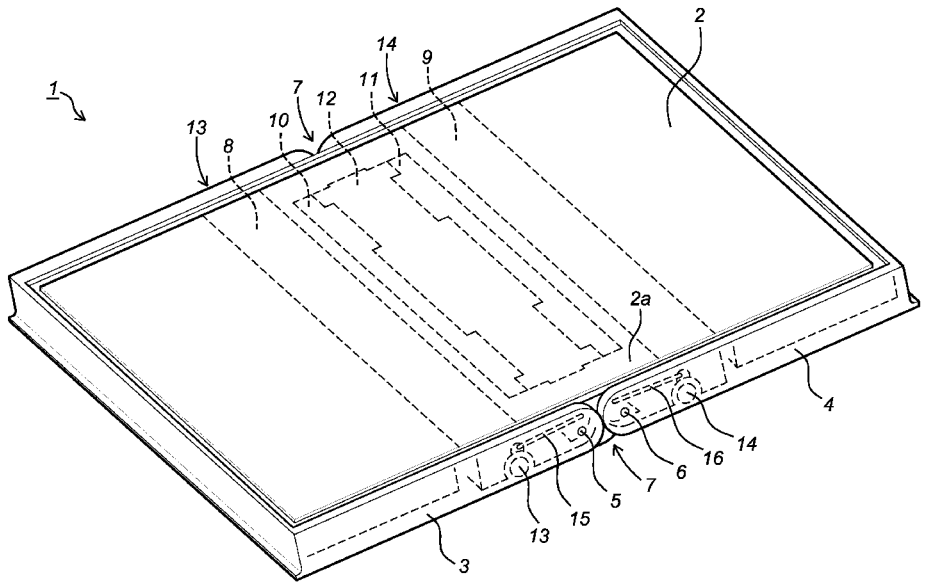
**8 Claims, 14 Drawing Sheets**