US009064431B2

(12) **United States Patent**
Ahn et al.

(10) **Patent No.: US 9,064,431 B2**
(45) **Date of Patent: Jun. 23, 2015**

(54) **FLEXIBLE DISPLAY DEVICE HAVING A FOLDING DEVICE INCLUDING A PLURALITY OF LINK MEMBERS**

(71) Applicants: **Sung-Sang Ahn**, Yongin (KR); **Sang-Hyun Lim**, Yongin (KR)

(72) Inventors: **Sung-Sang Ahn**, Yongin (KR); **Sang-Hyun Lim**, Yongin (KR)

(73) Assignee: **SAMSUNG DISPLAY CO., LTD.**, Yongin, Gyunggi-Do (KR)

(*) Notice: Subject to any disclaimer, the term of this patent is extended or adjusted under 35 U.S.C. 154(b) by 152 days.

(21) Appl. No.: **13/628,503**

(22) Filed: **Sep. 27, 2012**

(65) **Prior Publication Data**

US 2013/0342090 A1 Dec. 26, 2013

(30) **Foreign Application Priority Data**

Jun. 26, 2012 (KR) 10-2012-0068710

(51) **Int. Cl.**
G06F 1/16 (2006.01)
G09F 9/33 (2006.01)

(52) **U.S. Cl.**
CPC ***G09F 9/33*** (2013.01); ***G06F 1/1616*** (2013.01)

(58) **Field of Classification Search**
CPC G02F 1/133305; H04M 1/0268; H05B 33/02; G06F 1/1616; G06F 1/1641; G06F 1/1652; G09F 9/301
USPC 361/679.01, 679.27
See application file for complete search history.

(56) **References Cited**

U.S. PATENT DOCUMENTS

8,125,759	B2 *	2/2012	Fukuma et al.	361/260
8,151,501	B2 *	4/2012	Bemelmans et al.	40/610
8,369,075	B2 *	2/2013	Huang	361/679.21
8,385,055	B2 *	2/2013	Kao et al.	361/679.06
2010/0182265	A1	7/2010	Kim et al.	
2010/0232100	A1 *	9/2010	Fukuma et al.	361/679.01
2011/0210937	A1	9/2011	Kee et al.	
2012/0002360	A1 *	1/2012	Seo et al.	361/679.01
2012/0033353	A1 *	2/2012	Huang	361/679.01
2012/0033354	A1 *	2/2012	Huang	361/679.01
2012/0044620	A1 *	2/2012	Song et al.	361/679.01
2012/0120618	A1 *	5/2012	Bohn	361/749
2012/0200991	A1	8/2012	Ryu	
2012/0264489	A1 *	10/2012	Choi et al.	455/566
2012/0307423	A1 *	12/2012	Bohn et al.	361/679.01
2012/0307472	A1 *	12/2012	Bohn et al.	361/807
2012/0314399	A1 *	12/2012	Bohn et al.	362/97.1

(Continued)

FOREIGN PATENT DOCUMENTS

JP	2004-118803	A	4/2004
KR	10-2009-0087303	A	8/2009
KR	10-2010-0082451		7/2010

(Continued)

OTHER PUBLICATIONS

Internet material—techcrunch.com/2009/10/07/sony-flexible-oled-display-on-display-at-ceatec.

Primary Examiner — Lisa Lea Edmonds
Assistant Examiner — Keith Depew
(74) *Attorney, Agent, or Firm* — Lee & Morse, P.C.

(57) **ABSTRACT**

A flexible display device includes a housing including a first support and a second support, the first support and the second support being coupled with each other so as to be folded and unfolded by a folding device, and a flexible panel coupled with the housing. The folding device includes a plurality of link members for rotatably connecting the first support and the second support to each other.
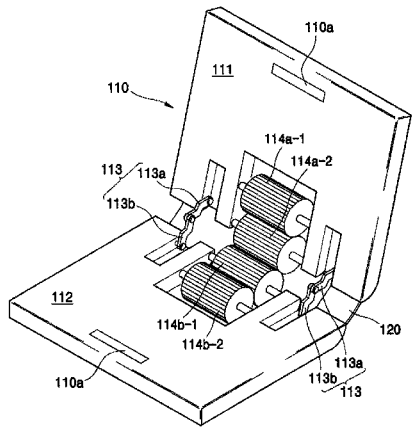
9 Claims, 5 Drawing Sheets