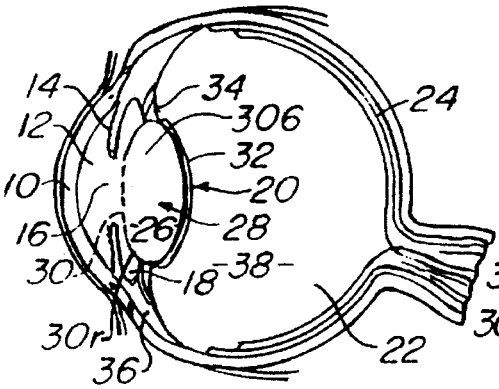

FIG—.1

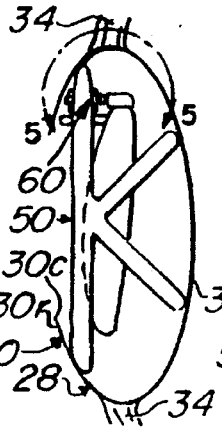

FIG—.2

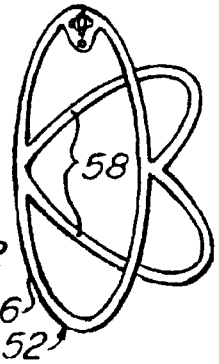

FIG—.3

FIG—.4

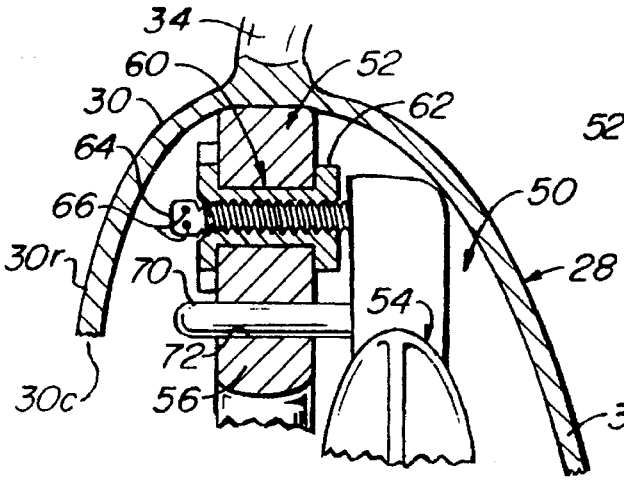

FIG—.5

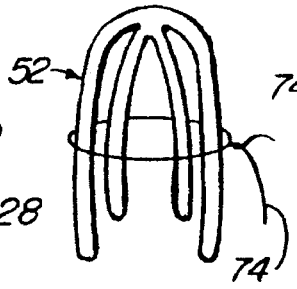

FIG—.6

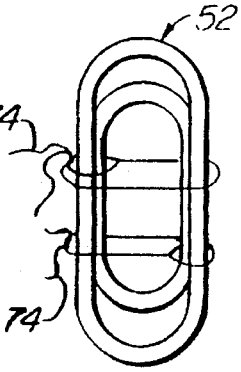

FIG—.7

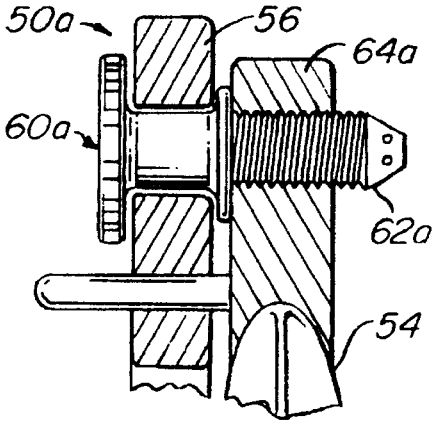

FIG—.8

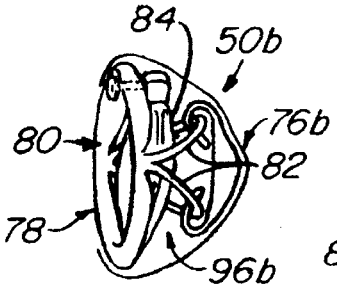

FIG—.9

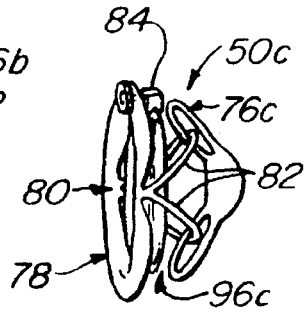

FIG—.10