US005562731A

United States Patent [19]

Cumming

[11] **Patent Number: 5,562,731**

[45] **Date of Patent: Oct. 8, 1996**

[54] **INTRAOCULAR IMPLANT METHODS**

[76] Inventor: **J. Stuart Cumming**, #201 - 1211 W. LaPalma Ave., Anaheim, Calif. 92801

[21] Appl. No.: **268,794**

[22] Filed: **Jul. 1, 1994**

Related U.S. Application Data

[62] Division of Ser. No. 744,472, Aug. 12, 1991, Pat. No. 5,326,347.

[51] **Int. Cl.**[6] **A61F 2/16**

[52] **U.S. Cl.** **623/6**

[58] **Field of Search** 623/6

[56] **References Cited**

U.S. PATENT DOCUMENTS

4,888,016	12/1989	Langerman	623/6
4,932,971	6/1990	Kelman	623/6
4,963,148	10/1990	Sulc et al.	623/6
5,074,876	12/1991	Kelman	623/6
5,203,788	4/1993	Wiley	623/6

Primary Examiner—Randy C. Shay
Attorney, Agent, or Firm—Boniard I. Brown

[57] **ABSTRACT**

An intraocular implant for use in a human eye following cataract, refractive or other eye surgery. The implant has a holder and imaging optics which may be folded to a compact configuration, inserted into the eye separately, and then assembled by the surgeon in the eye by mounting the optics on the holder after the holder has been implanted in the eye. These optics include a lens which is adjustable within the eye relative to the holder by the surgeon during surgery to focus the optics on the retina of the eye and are adjustable postoperatively by the implantee to near and distant focus positions by movement of the implantee's head and by magnetic action. The disclosed implants are inserted into the capsular bag of an eye from which the nucleus and cortex have been removed and retain the bag in substantially its natural shape and volume in a manner which inhibits opacification of the posterior capsule of the bag, prevents the vitreous volume from increasing postoperatively, and thereby prevents many complications which often attend cataract surgery.
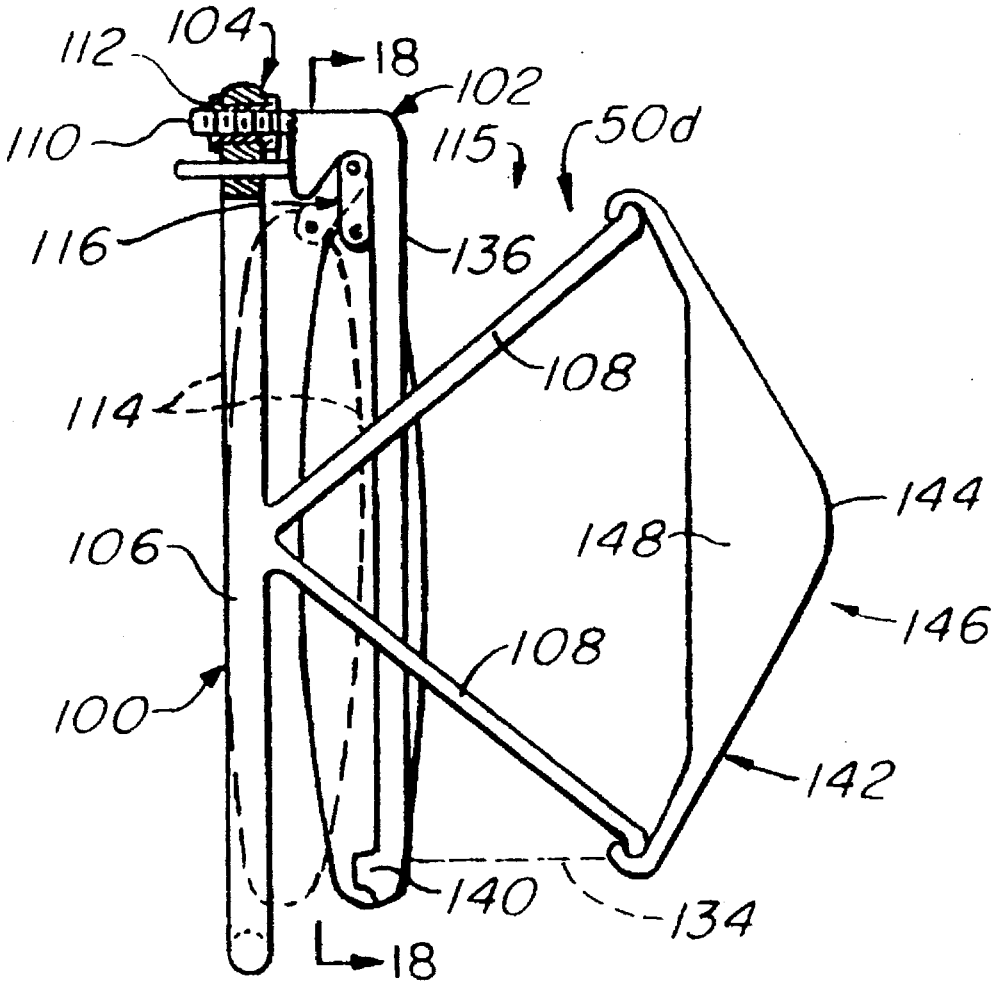
16 Claims, 6 Drawing Sheets