US005757731A

United States Patent [19]

Rosenberg

[11] **Patent Number: 5,757,731**

[45] **Date of Patent: May 26, 1998**

[54] **LINEAR DIGITAL-ANALOG INTERACTIVE WRISTWATCH**

[76] Inventor: **Burton A. Rosenberg**, 1053 Marina Heights Rd., Brookings, Oreg. 97415

[21] Appl. No.: **160,291**

[22] Filed: **Nov. 19, 1993**

[51] **Int. Cl.**[6] **G04C 17/00**

[52] **U.S. Cl.** **368/242**; 368/223; 368/84

[58] **Field of Search** 368/240–242, 368/239, 82, 83, 84, 223

[56] **References Cited**

U.S. PATENT DOCUMENTS

2,221,413	11/1940	Schanz .	
2,226,138	12/1940	Prestinari	58/88
2,333,832	11/1943	Torroja .	
3,574,992	4/1971	Ladas	58/50
3,772,874	11/1973	Lefkowitz .	
3,823,551	7/1974	Riehl	58/23 R
3,956,879	5/1976	Bailey	58/2
3,968,639	7/1976	Berets	58/23
3,973,706	8/1976	Boyce	224/4 D
3,977,176	8/1976	Murakami	58/23 BA
4,015,422	4/1977	Van Haaten	368/281
4,103,484	8/1978	Bailey	58/125 C
4,161,098	7/1979	Ingendahl	58/2
4,194,355	3/1980	Nishida	368/282
4,204,399	5/1980	Heynisch	368/240
4,242,747	12/1980	Fahrenschon	368/242
4,270,196	5/1981	Terzian	368/82
4,271,497	6/1981	Terzian	368/82
4,323,996	4/1982	Ganter	368/88
4,357,691	11/1982	Goodchild	368/62
4,397,565	8/1983	Ota	368/242
4,435,046	3/1984	Nishimura	350/334
4,483,628	11/1984	Terzian	368/82
4,575,833	3/1986	Bakhtiari	368/282
4,690,567	9/1987	Rebeaud	368/203
4,752,919	6/1988	Clark	368/223
4,991,154	2/1991	Perucci	368/223
4,995,015	2/1991	Chiang	368/11
5,051,968	9/1991	Calabrese	368/76

FOREIGN PATENT DOCUMENTS

2185816	1/1974	France .	
2813234	10/1979	Germany .	
4241316	6/1983	Germany .	
3318801	11/1984	Germany .	
57-6380	1/1982	Japan .	
115893	6/1985	Japan	368/242
281339	12/1964	Netherlands	368/232
2052809	1/1981	United Kingdom .	

OTHER PUBLICATIONS

Academic American Enclyclopedia P 62 9Century Prior Art.

Primary Examiner—Bernard Roskoski
Attorney, Agent, or Firm—Milton M. Field

[57] **ABSTRACT**

A wristwatch linear time display (**32**) is disclosed which can be read at a glance and requires very little display space. Additional functions are described which use the remaining surplus display space. These functions substantially increase the usefulness of wristwatches. Devices for the wearer to interact with the added functions are disclosed.

The compact time display (**32**) may be located where it can be seen without turning a wrist. It may also be combined with other temporal displays to improve display clarity by eliminating clutter.
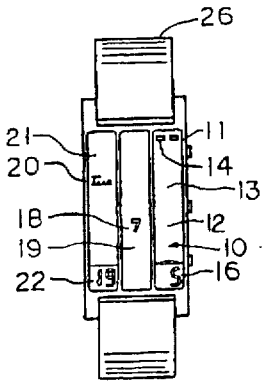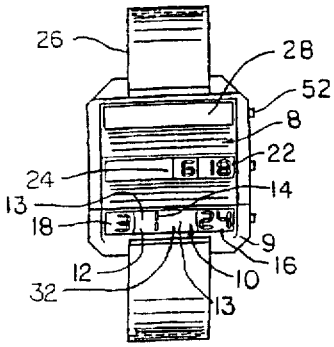
19 Claims, 3 Drawing Sheets