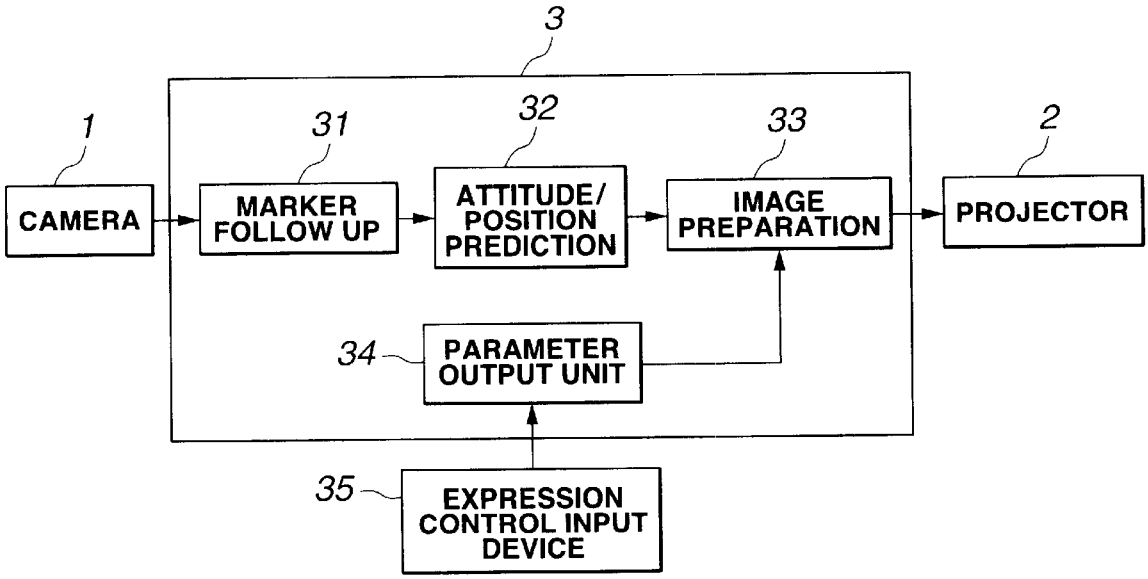
3
1
CAMERA
31
MARKER FOLLOW UP
32
ATTITUDE/ POSITION PREDICTION
33
IMAGE PREPARATION
2
PROJECTOR
34
PARAMETER OUTPUT UNIT
35
EXPRESSION CONTROL INPUT DEVICE

FIG.1

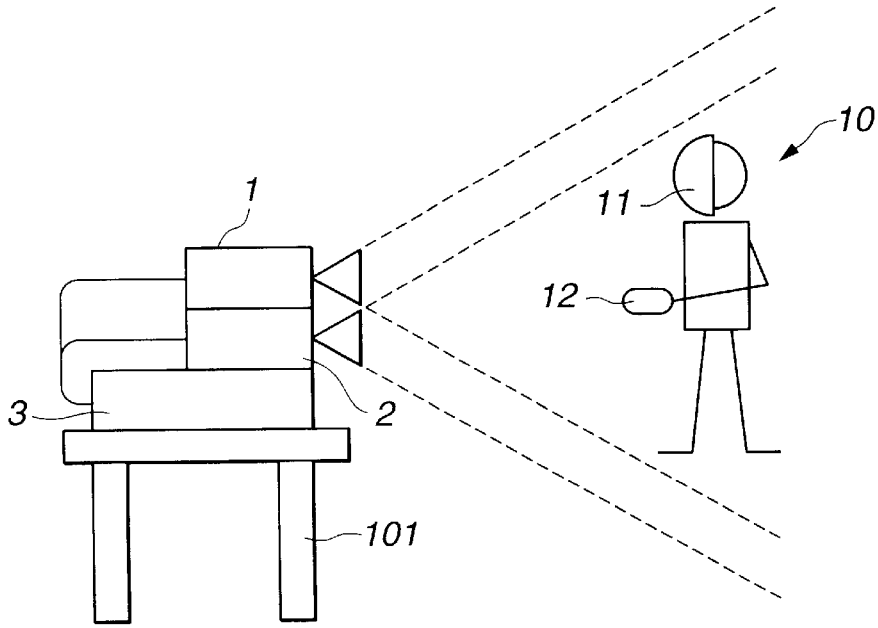
10
1
11
12
3
2
101

FIG.2