United States Patent [19]

Tsunoda et al.

[11] **Patent Number: 4,952,031**

[45] **Date of Patent: Aug. 28, 1990**

[54] **LIQUID CRYSTAL DISPLAY DEVICE**

[75] Inventors: **Ichiro Tsunoda**, Kawasaki; **Toshiyasu Eguchi**, Tsukuba, both of Japan

[73] Assignees: **Victor Company of Japan, Ltd.; Tokai University**, both of Japan

[21] Appl. No.: **204,608**

[22] Filed: **Jun. 9, 1988**

[30] **Foreign Application Priority Data**

Jun. 19, 1987 [JP] Japan 62-152460
Jun. 19, 1987 [JP] Japan 62-152461
Jul. 8, 1987 [JP] Japan 62-170524

[51] **Int. Cl.**[5] **G02F 1/13**; G02B 6/28

[52] **U.S. Cl.** **350/342**; 350/332; 350/333; 350/351; 350/96.16; 350/96.2

[58] **Field of Search** 350/342, 333, 334, 345, 350/332, 351, 96.1, 96.13, 96.16, 96.2, 96.3

[56] **References Cited**

U.S. PATENT DOCUMENTS

4,798,435 1/1989 Fujiwara et al. 350/96.13

FOREIGN PATENT DOCUMENTS

0134599 3/1985 European Pat. Off. 350/333

OTHER PUBLICATIONS

C. P. Stephens et al: A Multichip MOS Video Rate Liquid Crystal Display, 1976 SID Int. Symp. Digest of Technical Papers, pp. 44–45.

H. Matsukawa et al: A Continuous Very-Large-Area Liquid-Crystal Color Display, 1985 SID Int. Digest of Technical Papers, pp. 58–61.

O. Myodo et al: A Large Screen Color Display Using an Array of LCD Modules, Proc. of Japan Display, 1983, pp. 430–432.

A. G. Dewey et al: A4 Mpoh Liquid Crystal Projection Display Addresed by a GaAs Laser Array, 1982, SID Int. Symp. Digesst of Technical Papers, pp. 240–241.

J. D. Margerum et al: Reversible Ultraviolet Imaging with Liquid Crystals, Appl. Phys. Lett., 17, pp. 51–53 (1970).

R. A. Soref: Thermo-Optic Effects in Nemotic-Cholestric Mixtures, J. Appl. Phys., 41 (1970).

Primary Examiner—Stanley D. Miller
Assistant Examiner—Huy K. Mai
Attorney, Agent, or Firm—Andrus, Sceales, Starke & Sawall

[57] **ABSTRACT**

A liquid crystal display device comprises a plurality of lateral electrodes and a plurality of longitudinal electrodes carried on a pair of substrates. A scanning signal addressing one of the lateral electrodes is supplied to a scanning signal bus which is connected to each of the lateral electrode via an optically activated switch and a video signal to be supplied to one of the longitudinal electrodes is supplied to a display signal bus which is connected to each of the longitudinal signal bus. The optically activated switches are selectively activated by irradiation of an optical beam and the scanning signal and the video signal are supplied to the addressed electrodes.
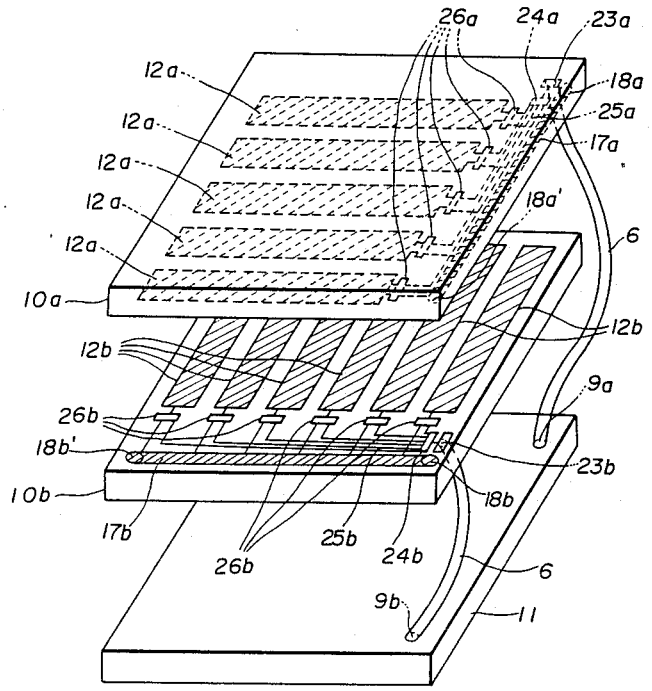
12 Claims, 16 Drawing Sheets