United States Patent [19]

Gmitter et al.

[11] **Patent Number: 4,846,931**

[45] **Date of Patent: Jul. 11, 1989**

[54] **METHOD FOR LIFTING-OFF EPITAXIAL FILMS**

[75] Inventors: **Thomas J. Gmitter**, Lakewood; **Eli Yablonovitch**, Middletown, both of N.J.

[73] Assignee: **Bell Communications Research, Inc.**, Livingston, N.J.

[21] Appl. No.: **174,852**

[22] Filed: **Mar. 29, 1988**

[51] **Int. Cl.**[4] **H01L 21/306**; B44C 1/22; C03C 15/00; C03C 25/06

[52] **U.S. Cl.** **156/633**; 156/655; 156/662; 350/96.12

[58] **Field of Search** 156/631, 629, 630, 635, 156/655, 662, 668; 437/2, 228, 234; 350/96.12, 96.2, 96.29, 96.3

[56] **References Cited**

PUBLICATIONS

M. Konagai et al., "High Efficiency GaAs Thin Film Solar Cells by Peeled Film Technology," *Journal of Crystal Growth,* 45, pp. 277–280 (1978).

K. Y. Lee et al., "Fabrication of Ultrasmall Devices on Thin Active GaAs Membrane," *J. Vac. Sci. Technol.* B5(1), 322–325, Jan./Feb. (1987).

J. C. C. Fan, "Thin Films of III–V Compounds and Their Applications," *Journal de Physique,* 43, Ci–327 (1982).

D. L. Miller et al., "GaAs Peeled Film Solar Cells," Document #MRDC41056.49 FRD, Final Report Draft for the period 3/15/80–12/31/81 prepared for Solar Energy Research Institute under subcontract No. X5–0–9002–2.

Yablonovitch et al., "Extreme Selectivity in the Lift-Off of Epitaxial GaAs Films" *Appl. Phys. Letters,* 51(26) 2222–2224 (Dec. 28, 1987).

Primary Examiner—William A. Powell

Attorney, Agent, or Firm—James W. Falk; Charles S. Guenzer

[57] **ABSTRACT**

A method for removing epitaxial films from a single crystal substrate upon which it is grown comprising (a) providing a thin release layer (≦1000A) between the film to be grown and the substrate; (b) growing the epitaxial film(s); (c) applying a polymeric support layer which is under tension over the film; and (d) selectively etching the release layer, the tension in the support layer causing the edges of the film to curve upwardly as the release layer is etched away.
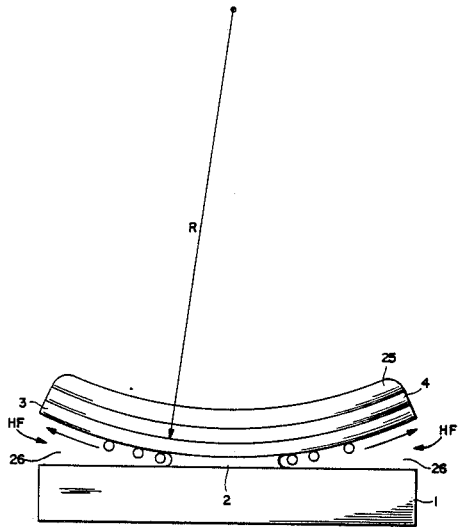
17 Claims, 2 Drawing Sheets