July 6, 1948. J. H. RICHARDSON 2,444,531

CHUCK

Filed Jan. 5, 1946

Fig. 1

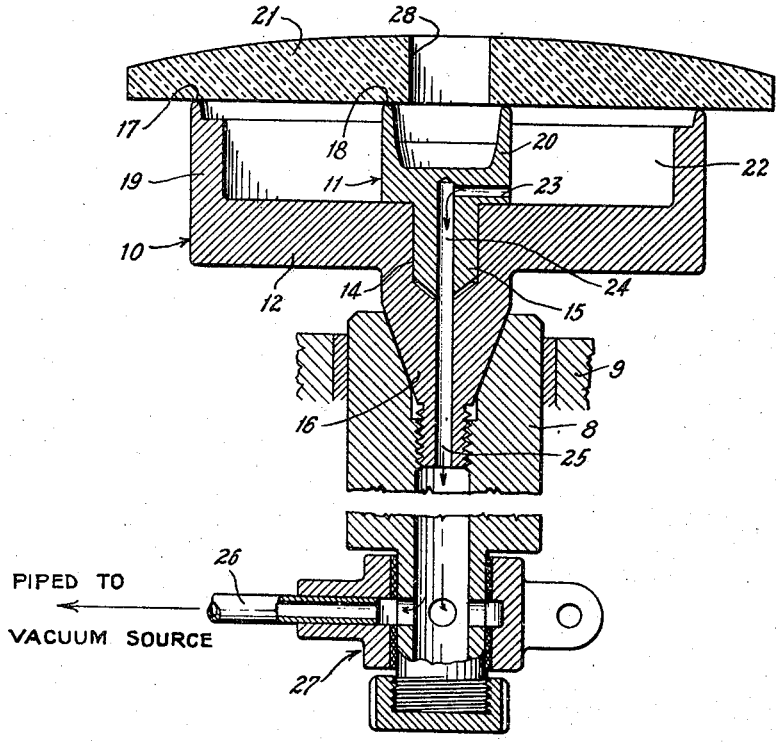

Fig. 2

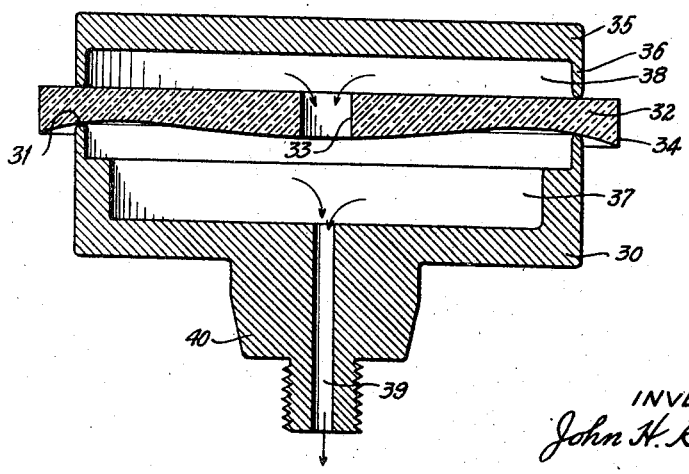

INVENTOR.
John H. Richardson

Dale A. Bauer
ATTORNEY.