FIG.1

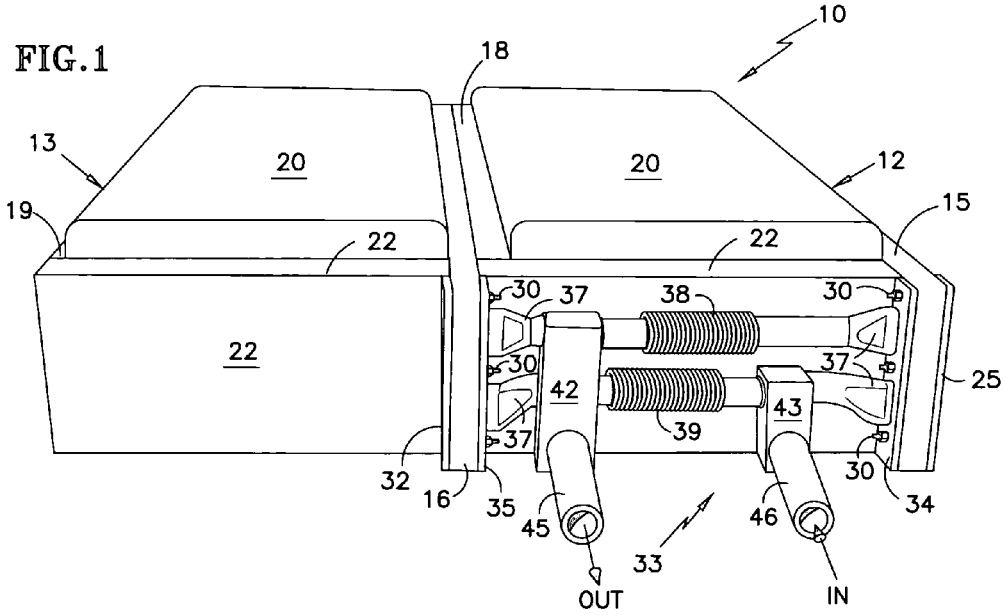
10
18
13
20
20
12
19
15
22
22
22
30
37
38
30
30
37
42
43
25
37
39
32
16
35
45
46
30
34
33
OUT
IN

FIG.2

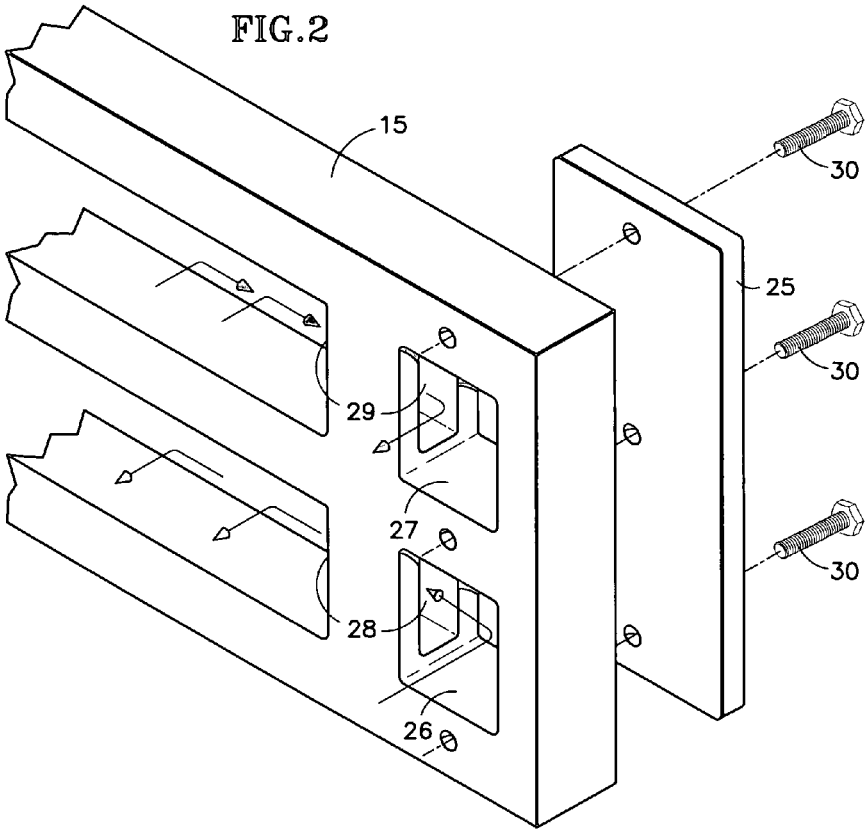
15
30
25
30
29
27
30
28
26