US007338731B2

(12) **United States Patent**
Ingriselli et al.

(10) **Patent No.: US 7,338,731 B2**
(45) **Date of Patent: Mar. 4, 2008**

(54) **COMPACT REACTANT GAS PLUMBING SERVING DUAL IDENTICAL FUEL CELL STACKS**

(75) Inventors: **Enzo Ingriselli**, Southington, CT (US); **Dale W. Petty**, Wallingford, CT (US)

(73) Assignee: **UTC Power Corporation**, South Windsor, CT (US)

(*) Notice: Subject to any disclaimer, the term of this patent is extended or adjusted under 35 U.S.C. 154(b) by 596 days.

(21) Appl. No.: **10/713,799**

(22) Filed: **Nov. 13, 2003**

(65) **Prior Publication Data**

US 2005/0106437 A1 May 19, 2005

(51) **Int. Cl.**
H01M 8/04 (2006.01)
H01M 2/00 (2006.01)

(52) **U.S. Cl.** **429/38**; 429/32; 429/34; 429/35; 429/39

(58) **Field of Classification Search** 429/12
See application file for complete search history.

(56) **References Cited**

U.S. PATENT DOCUMENTS

6,613,470 B1 * 9/2003 Sugita et al. 429/38
2001/0002299 A1 * 5/2001 Reiser 429/13
2002/0187382 A1 * 12/2002 Nishiumi et al. 429/34
2005/0106446 A1 * 5/2005 Sato et al. 429/38

* cited by examiner

Primary Examiner—Jonathan Crepeau
Assistant Examiner—Tony Chuo
(74) *Attorney, Agent, or Firm*—M. P. Williams

(57) **ABSTRACT**

A power plant (**10**) having a pair of substantially identical fuel cell stacks (**12**, **13**), each having an oxidant or fuel inlet/outlet manifold (**15**, **16**) identical to the inlet/outlet manifold of the other stack, each inlet/outlet manifold mounted on the same side of the corresponding stack as the other inlet/outlet manifold on the other stack (the right side herein). Inlet/outlet plumbing is disposed at the end of one of the stacks (**12**) between the inlet/outlet manifolds (**15**, **16**), the plumbing including a T-like transition (**43**) between a supply pipe (**46**) and an inlet tube (**39**) that feeds the inlets of both of the inlet/outlet manifolds (**15**, **16**). At each inlet/outlet manifold, the side which is not connected to plumbing is blocked off with a seal plate (**25**, **32**). Inlet and outlet tubes (**38**, **39**) include flexible tubing portions, whereby to allow for dimensional and/or positional variations between fuel cell power plants.
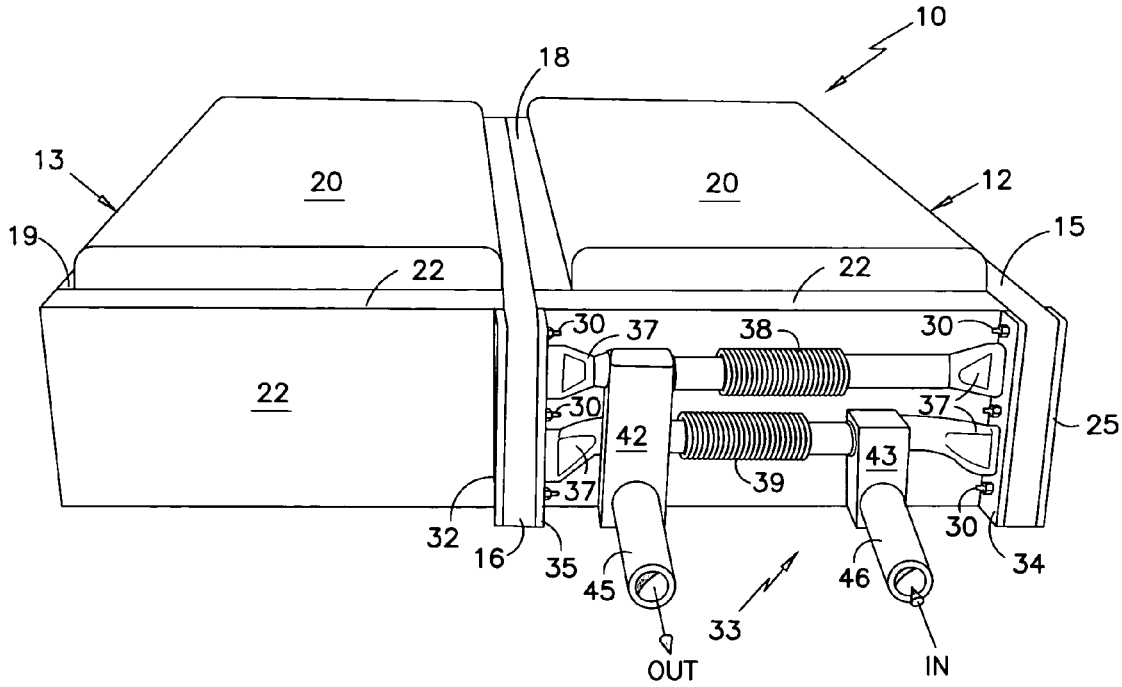
3 Claims, 2 Drawing Sheets