US009636431B2

(12) **United States Patent**
Teeling et al.

(10) **Patent No.: US 9,636,431 B2**
(45) **Date of Patent: May 2, 2017**

(54) **DISPENSER, AND REFILL**

(75) Inventors: **Matthew Teeling**, Reading (GB); **Paul Wonnacott**, Esher (GB)

(73) Assignee: **Vectair Systems Limited**, Basingstoke (GB)

(*) Notice: Subject to any disclaimer, the term of this patent is extended or adjusted under 35 U.S.C. 154(b) by 333 days.

(21) Appl. No.: **13/591,965**

(22) Filed: **Aug. 22, 2012**

(65) **Prior Publication Data**

US 2013/0056552 A1 Mar. 7, 2013

(51) **Int. Cl.**

B05B 1/08	(2006.01)
A61L 9/14	(2006.01)
B05B 17/06	(2006.01)
B05B 1/30	(2006.01)
B05B 17/00	(2006.01)

(52) **U.S. Cl.**

CPC ***A61L 9/14*** (2013.01); ***B05B 17/0607*** (2013.01); ***B05B 17/0676*** (2013.01); *A61L 2209/132* (2013.01); *A61L 2209/133* (2013.01); *B05B 1/30* (2013.01); *B05B 17/0646* (2013.01)

(58) **Field of Classification Search**

CPC .. A61L 9/14; A61L 2209/133; B05B 17/0607
USPC 239/102.2, 407; 220/694
See application file for complete search history.

(56) **References Cited**

U.S. PATENT DOCUMENTS

5,297,734 A * 3/1994 Toda B05B 17/0646 239/102.2
6,062,425 A * 5/2000 Brown A47K 5/12 222/1
6,659,364 B1 * 12/2003 Humberstone B05B 17/0646 239/102.1
2008/0314930 A1 * 12/2008 Green B67D 3/0035 222/185.1
2010/0206306 A1 * 8/2010 Feriani A61M 11/005 128/203.12

(Continued)

FOREIGN PATENT DOCUMENTS

EP 1382339 A1 1/2004
EP 2216100 A1 8/2010

(Continued)

OTHER PUBLICATIONS

EPO Extended Search Report; Application No. 12181952.8-2113; Nov. 29, 2012.

(Continued)

Primary Examiner — Arthur O Hall
Assistant Examiner — Joel Zhou
(74) *Attorney, Agent, or Firm* — Westman, Champlin & Koehler, P.A.; Z. Peter Sawicki; Amanda M. Prose

(57) **ABSTRACT**

A dispenser capable of dispensing a fluid via a vertically-oriented piezo device comprises a reservoir containing a fluid to be dispensed, an outlet at a base portion of the reservoir, leading to a dispensing port that comprises a piezo element drivable to vibrate and thereby dispense fluid from the dispensing port, a bleed tube communicating at one end with the dispensing port, extending therefrom to a location above the dispensing port, and including a selectively closeable valve, and a source of below-atmospheric pressure to the portion of the reservoir above the fluid. Embodiments of refills suitable for such a dispensing apparatus are also described.
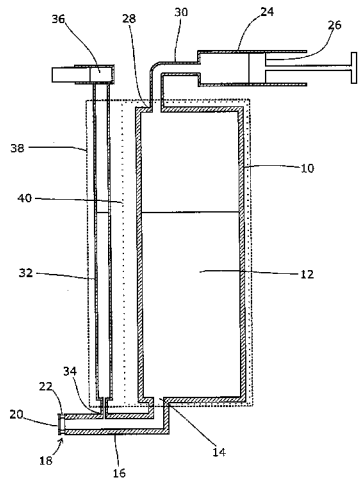
5 Claims, 5 Drawing Sheets