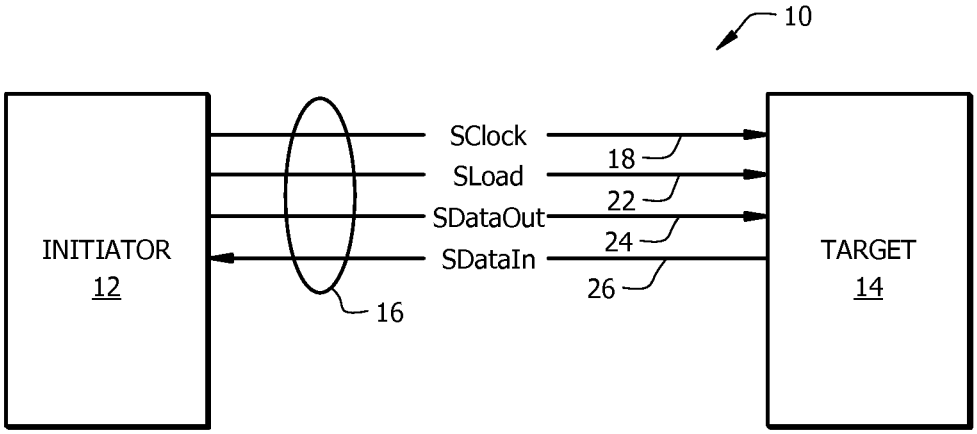
10
INITIATOR
12
SClock
SLoad
SDataOut
SDataIn
18
22
24
26
16
TARGET
14

FIG. 1

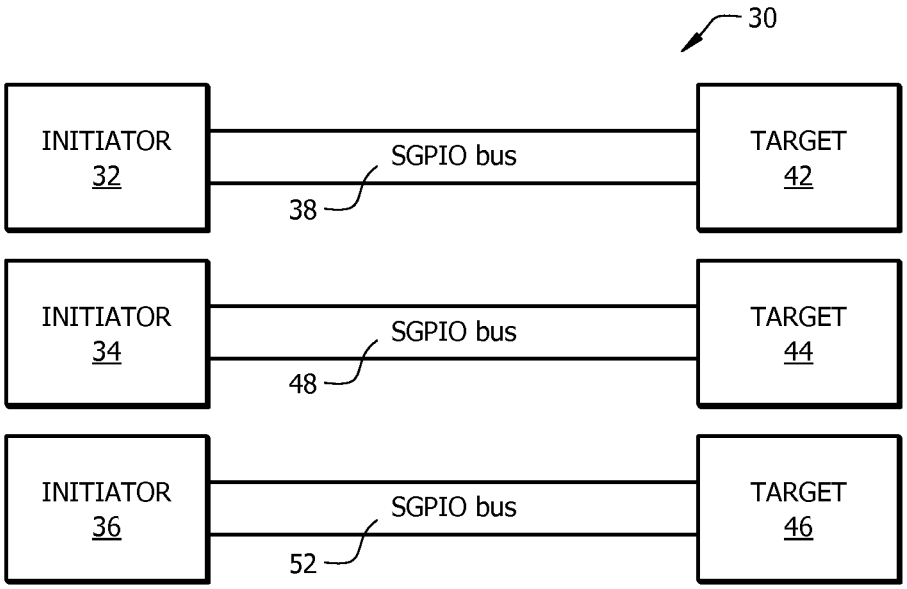
30
INITIATOR
32
SGPIO bus
38
TARGET
42
INITIATOR
34
SGPIO bus
48
TARGET
44
INITIATOR
36
SGPIO bus
52
TARGET
46

FIG. 2