US009410931B1

(12) **United States Patent**
Okandan et al.

(10) **Patent No.: US 9,410,931 B1**
(45) **Date of Patent: Aug. 9, 2016**

(54) **MINIATURIZED PHOTOACOUSTIC SPECTROMETER**

(71) Applicant: **Sandia Corporation**, Albuquerque, NM (US)

(72) Inventors: **Murat Okandan**, Edgewood, NM (US); **Alex Robinson**, Albuquerque, NM (US); **Gregory N. Nielson**, Albuquerque, NM (US); **Paul J. Resnick**, Albuquerque, NM (US)

(73) Assignee: **Sandia Corporation**, Albuquerque, NM (US)

(*) Notice: Subject to any disclaimer, the term of this patent is extended or adjusted under 35 U.S.C. 154(b) by 366 days.

(21) Appl. No.: **14/056,863**

(22) Filed: **Oct. 17, 2013**

(51) **Int. Cl.**
G01N 29/36 (2006.01)

(52) **U.S. Cl.**
CPC ***G01N 29/36*** (2013.01)

(58) **Field of Classification Search**
CPC G01N 21/1702; G01N 29/02
USPC 73/584, 655, 24.02
See application file for complete search history.

(56) **References Cited**

U.S. PATENT DOCUMENTS

4,412,105 A * 10/1983 Muscatell H04R 5/027 381/172
5,194,847 A * 3/1993 Taylor G01H 9/004 340/541
6,662,627 B2 12/2003 Arnott et al.
7,245,380 B2 * 7/2007 Kosterev G01N 21/1702 250/343
7,886,576 B2 2/2011 Uber
8,240,189 B2 * 8/2012 Myrick G01N 21/3504 73/24.02
8,451,447 B2 5/2013 Fritz et al.
2002/0093658 A1 * 7/2002 Han G01N 21/1702 356/432
2004/0095570 A1 * 5/2004 Stanimirov G01R 15/247 356/128
2010/0139368 A1 * 6/2010 Kotovsky G01N 21/1702 73/24.06
2011/0154884 A1 * 6/2011 Weppenaar F16L 11/082 73/24.02
2012/0055232 A1 3/2012 Thorson
2012/0272719 A1 11/2012 Rezachek
2013/0142519 A1 * 6/2013 Iwamoto H04R 23/008 398/133

* cited by examiner

Primary Examiner — J M Saint Surin

(74) *Attorney, Agent, or Firm* — Medley, Behrens & Lewis, LLC; Aman Talwar

(57) **ABSTRACT**

A low-power miniaturized photoacoustic sensor uses an optical microphone made by semiconductor fabrication techniques, and optionally allows for all-optical communication to and from the sensor. This allows integration of the photoacoustic sensor into systems with special requirements, such as those that would be reactive in an electrical discharge condition. The photoacoustic sensor can also be operated in various other modes with wide application flexibility.
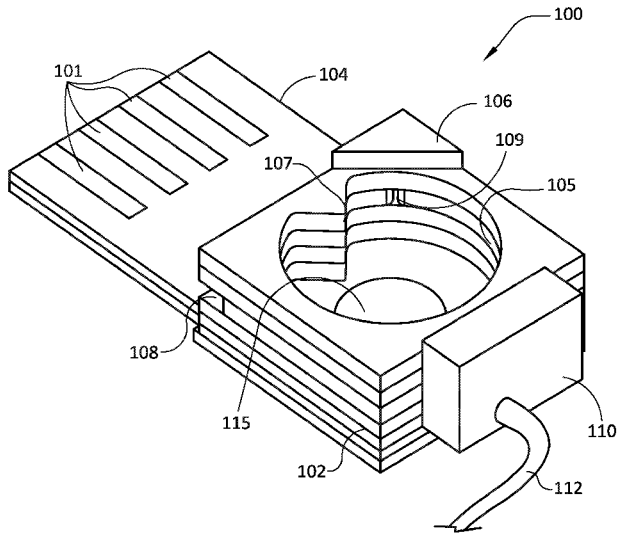
20 Claims, 9 Drawing Sheets