US009410831B2

(12) **United States Patent**
**Smith et al.**

(10) **Patent No.: US 9,410,831 B2**
(45) **Date of Patent: Aug. 9, 2016**

(54) **MAGNETIC FLOWMETER FLOWTUBE ASSEMBLY WITH SPRING-ENERGIZED SEAL RINGS**

(71) Applicant: **Rosemount Inc.**, Chanhassen, MN (US)

(72) Inventors: **Joseph A. Smith**, Minneapolis, MN (US); **Steven B. Rogers**, Minnetonka, MN (US); **Nicholas W. Bond**, Belle Plaine, MN (US)

(73) Assignee: **MICRO MOTION, INC.**, Boulder, CO (US)

( * ) Notice: Subject to any disclaimer, the term of this patent is extended or adjusted under 35 U.S.C. 154(b) by 41 days.

(21) Appl. No.: **14/493,946**

(22) Filed: **Sep. 23, 2014**

(65) **Prior Publication Data**

US 2016/0084690 A1 Mar. 24, 2016

(51) **Int. Cl.**
***G01F 1/58*** (2006.01)

(52) **U.S. Cl.**
CPC ..... ***G01F 1/584*** (2013.01)

(58) **Field of Classification Search**
CPC ..... G01F 1/58
USPC ..... 73/861.12, 861.14
See application file for complete search history.

(56) **References Cited**

U.S. PATENT DOCUMENTS

4,345,464 A * 8/1982 Herzl ..... G01F 1/58 285/31
5,526,698 A * 6/1996 Sakurai ..... G01F 1/588 73/861.08
5,577,472 A 11/1996 Banta, III et al.
5,938,246 A 8/1999 Wallace et al.
7,178,407 B2 2/2007 Kappertz et al.
7,637,169 B2 * 12/2009 Shanahan ..... G01F 15/185 73/861.08
7,823,461 B2 11/2010 Kappertz et al.
7,895,902 B2 3/2011 Iijima
7,938,020 B2 5/2011 Diederichs
8,082,803 B2 12/2011 Iijima
2006/0213284 A1 9/2006 Visser et al.
2006/0220324 A1 10/2006 Anderson et al.
2007/0163360 A1 7/2007 Baecker et al.
2007/0193366 A1 8/2007 Backer et al.
2008/0236899 A1 10/2008 Oxford et al.
2009/0243290 A1 10/2009 Anderson et al.

(Continued)

FOREIGN PATENT DOCUMENTS

JP 06-078820 U 11/1994

OTHER PUBLICATIONS

International Search Report and Written Opinion for International Application No. PCT/US2015/051009, date of mailing: Dec. 9, 2015, date of filing: Sep. 18, 2015, 13 pages.

(Continued)

*Primary Examiner* — Jewel V Thompson
(74) *Attorney, Agent, or Firm* — Christopher R. Christenson; Kelly, Holt & Christenson, PLLC

(57) **ABSTRACT**

A magnetic flowmeter flowtube assembly includes a conduit having a first end with a first flange and a second end with a second flange. A fluoropolymer liner is disposed within and extending through the first flange, the conduit and the second flange. A first lining protector is mounted to the first flange and a second lining protector mounter to the second flange. A first spring-energized seal is disposed between the first lining protector and the fluoropolymer liner. A second spring-energized seal is disposed between the second lining protector and the fluoropolymer liner.
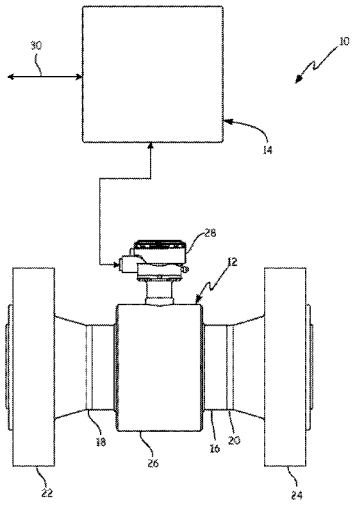
**15 Claims, 4 Drawing Sheets**