US009410631B1

(12) **United States Patent**
Langenfeld

(10) **Patent No.: US 9,410,631 B1**
(45) **Date of Patent: Aug. 9, 2016**

(54) **VALVE**

(71) Applicant: **Hydro-Gear Limited Partnership**, Sullivan, IL (US)

(72) Inventor: **Thomas J. Langenfeld**, Sullivan, IL (US)

(73) Assignee: **Hydro-Gear Limited Partnership**, Sullivan, IL (US)

(*) Notice: Subject to any disclaimer, the term of this patent is extended or adjusted under 35 U.S.C. 154(b) by 244 days.

(21) Appl. No.: **14/197,892**

(22) Filed: **Mar. 5, 2014**

Related U.S. Application Data

(60) Continuation of application No. 13/417,379, filed on Mar. 12, 2012, now abandoned, which is a division of application No. 12/166,911, filed on Jul. 2, 2008, now Pat. No. 8,132,588.

(51) **Int. Cl.**

F16K 11/065	(2006.01)
G05D 11/02	(2006.01)
F16H 61/4104	(2010.01)
F16K 17/18	(2006.01)

(52) **U.S. Cl.**
CPC ***F16K 11/065*** (2013.01); ***F16K 17/18*** (2013.01); *F16H 61/4104* (2013.01); *G05D 11/02* (2013.01); *Y10T 137/2521* (2015.04); *Y10T 137/2564* (2015.04); *Y10T 137/2567* (2015.04)

(58) **Field of Classification Search**
USPC 137/100, 111, 112, 114; 60/464
See application file for complete search history.

(56) **References Cited**

U.S. PATENT DOCUMENTS

776,061 A		11/1904	Hewett	
1,736,749 A		11/1929	Penn	
2,069,366 A	*	2/1937	Heerdt	F16H 61/40 137/109
2,122,045 A	*	6/1938	Rose	F16H 61/40 137/494
2,657,533 A		11/1953	Schanzlin et al.	
2,675,016 A		4/1954	Siver	
2,781,639 A	*	2/1957	Badalini	F16H 61/40 137/112
2,961,829 A		11/1960	Weisenbach	
3,078,674 A		2/1963	Anderson	
3,182,454 A		5/1965	Jonkers et al.	
3,576,192 A		4/1971	Wood et al.	
3,636,708 A	*	1/1972	Karman	F15B 7/006 60/462
3,863,449 A		2/1975	White, Jr.	
3,866,421 A	*	2/1975	Kersten	F16H 61/4104 60/456
3,901,261 A		8/1975	Riis	
4,128,113 A		12/1978	Hart	
4,253,382 A		3/1981	Yip	
4,332,134 A		6/1982	Cochran et al.	
4,343,601 A		8/1982	Thorson	
4,616,982 A		10/1986	Quarve	

(Continued)

Primary Examiner — Kevin Murphy
Assistant Examiner — Jonathan Waddy
(74) *Attorney, Agent, or Firm* — Neal, Gerber & Eisenberg LLP

(57) **ABSTRACT**

A valve for use between a first fluid side and a second fluid side is disclosed herein. The valve comprises a pair of subassemblies, each one slidable between a closed position and an open position. Each subassembly comprises a first component comprising a first component main body, a first component first end and a first component second end opposite the first component first end. A first component first extension is formed on each first component first end, the first component first extension comprising a diameter that is less than the diameter of the first component main body. Hydraulic pressure causes one subassembly to slide to its closed position, and causes it to engage the second subassembly, sliding the second subassembly to its open position.
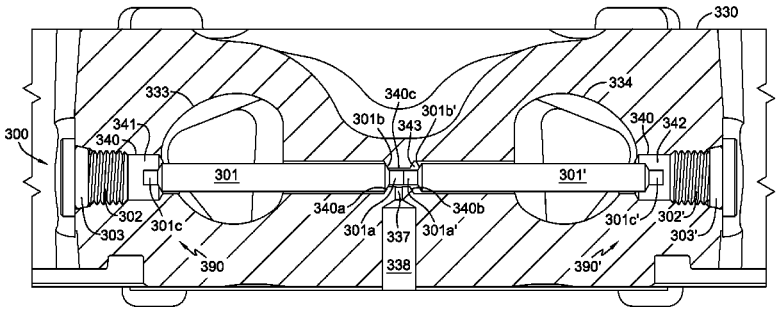
20 Claims, 8 Drawing Sheets