US009410531B2

(12) **United States Patent**
Hayashi

(10) **Patent No.: US 9,410,531 B2**
(45) **Date of Patent: Aug. 9, 2016**

(54) **WIND TURBINE GENERATOR**

(75) Inventor: **Yuki Hayashi**, Tokyo (JP)

(73) Assignee: **THK CO., LTD.**, Shinagawa-ku (JP)

(*) Notice: Subject to any disclaimer, the term of this patent is extended or adjusted under 35 U.S.C. 154(b) by 459 days.

(21) Appl. No.: **13/985,200**

(22) PCT Filed: **Mar. 6, 2012**

(86) PCT No.: **PCT/JP2012/055631**

§ 371 (c)(1),
(2), (4) Date: **Aug. 13, 2013**

(87) PCT Pub. No.: **WO2012/124536**

PCT Pub. Date: **Sep. 20, 2012**

(65) **Prior Publication Data**

US 2013/0323059 A1 Dec. 5, 2013

(30) **Foreign Application Priority Data**

Mar. 11, 2011 (JP) 2011-054265
Mar. 1, 2012 (JP) 2012-045618

(51) **Int. Cl.**
F03D 7/02 (2006.01)

(52) **U.S. Cl.**
CPC ***F03D 7/0224*** (2013.01); *F05B 2260/74* (2013.01); *F05B 2260/76* (2013.01); *F05B 2260/79* (2013.01); *Y02E 10/721* (2013.01); *Y02E 10/722* (2013.01); *Y02E 10/723* (2013.01)

(58) **Field of Classification Search**
CPC F03D 7/0224; F05B 2260/74; F05B 2260/76; F05B 2260/79
USPC ..... 415/129–133, 157, 158; 416/157 R, 416/159, 163, 164, 168 R
See application file for complete search history.

(56) **References Cited**

U.S. PATENT DOCUMENTS

3,082,826 A * 3/1963 Doman B64C 27/54 416/102
3,736,010 A * 5/1973 Larkin B64C 27/54 16/429
5,042,967 A * 8/1991 Desjardins ..... B64C 27/41 416/134 A

(Continued)

FOREIGN PATENT DOCUMENTS

CN 101037988 A 9/2007
CN 101802394 A 8/2010

(Continued)

OTHER PUBLICATIONS

International Search Report dated dated Jun. 5, 2012, issued in corresponding application No. PCT/JP2012/055631.

(Continued)

Primary Examiner — Thomas Denion
Assistant Examiner — Mickey France
(74) *Attorney, Agent, or Firm* — Westerman, Hattori, Daniels & Adrian, LLP

(57) **ABSTRACT**

A wind turbine generator includes a plurality of blades that radially protrude from a rotor head about an axis of a main shaft, and a pitch axis rotation mechanism that is provided in the rotor head to rotate the blade about a pitch axis P. The pitch axis rotation mechanism includes an actuator that is supported by the rotor head, and has a stretchable rod which is supported by the rotor head, and a link structure that links the rod to the blade. The actuator extends on the axis of the main shaft.
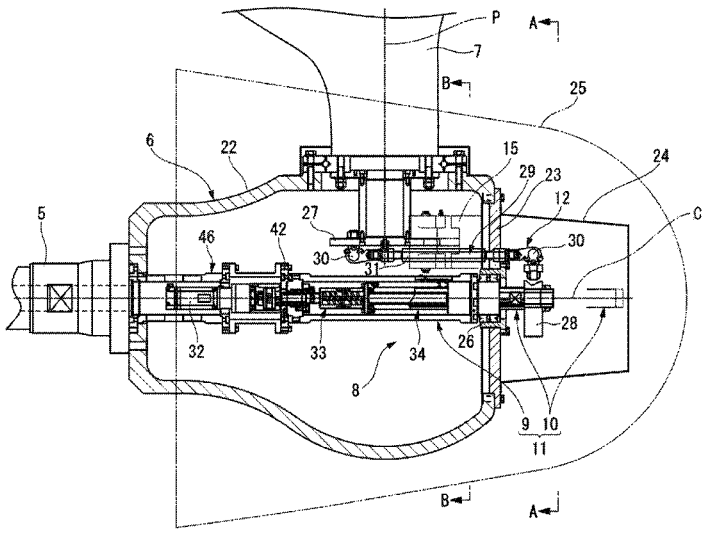
5 Claims, 11 Drawing Sheets