US009409631B2

(12) **United States Patent**
HØvik et al.

(10) **Patent No.: US 9,409,631 B2**
(45) **Date of Patent: Aug. 9, 2016**

(54) **LOADING HOSE**

(75) Inventors: **Jon HØvik**, Færvik (NO); **Rients van der Woude**, Risor (NO)

(73) Assignee: **MacGregor Norway AS**, Kristiansand (NO)

(*) Notice: Subject to any disclaimer, the term of this patent is extended or adjusted under 35 U.S.C. 154(b) by 138 days.

(21) Appl. No.: **13/820,376**

(22) PCT Filed: **Aug. 29, 2011**

(86) PCT No.: **PCT/EP2011/064775**
§ 371 (c)(1),
(2), (4) Date: **Apr. 18, 2013**

(87) PCT Pub. No.: **WO2012/028561**
PCT Pub. Date: **Mar. 8, 2012**

(65) **Prior Publication Data**

US 2013/0203311 A1 Aug. 8, 2013

(30) **Foreign Application Priority Data**

Sep. 1, 2010 (NO) 20101216

(51) **Int. Cl.**
B63B 22/00 (2006.01)
B63B 27/24 (2006.01)
B67D 9/00 (2010.01)

(52) **U.S. Cl.**
CPC .. ***B63B 27/24*** (2013.01); *B67D 9/00* (2013.01)

(58) **Field of Classification Search**
CPC B63B 27/24; B63B 27/34; B63B 27/25; B67D 9/00
USPC 441/133, 3, 4, 5; 114/230.1, 230.12, 114/230.13, 230.2, 230.23; 405/169, 171, 405/195.1, 207, 208, 210, 224.2
See application file for complete search history.

(56) **References Cited**

U.S. PATENT DOCUMENTS

3,466,680	A	9/1969	Schirtzinger	
5,431,589	A *	7/1995	Corona	441/4
5,582,252	A *	12/1996	Richmond et al.	166/352
5,803,779	A	9/1998	Horton, III	
6,916,218	B2 *	7/2005	Lavagna et al.	441/4
7,677,837	B2	3/2010	Pionetti et al.	
2007/0009329	A1	1/2007	Chouest	
2007/0059104	A1 *	3/2007	Clausen et al.	405/171
2010/0055363	A1 *	3/2010	Chevalier et al.	428/36.5
2010/0101473	A1 *	4/2010	Breivik et al.	114/230.23

FOREIGN PATENT DOCUMENTS

EP	0 396 391	A1	11/1990
EP	1 428 748	A1	6/2004

(Continued)

OTHER PUBLICATIONS

International Search Report issued in PCT/EP2011/064775 mailed Dec. 7, 2011 (4 pages).
Written Opinion issued in PCT/EP2011/064775 mailed Dec. 7, 2011 (4 pages).
International Preliminary Report on Patentability w/amended sheets issued in PCT/EP2011/064775 mailed Oct. 30, 2012 (11 pages).
Norwegian Search Report issued in U.S. Pat. No. 20101216 dated Feb. 21, 2011 (2 pages).

(Continued)

Primary Examiner — Anthony Wiest
(74) *Attorney, Agent, or Firm* — Osha Liang LLP

(57) **ABSTRACT**

A hydrocarbon loading hose (**4**) for connection between a GBS (**1**) and a shuttle hydrocarbon transport vessel (**2**), arranged in water (W) and at a distance apart, comprises buoyancy means (**5**) in its mid region and at least one buoyancy element (**7***a, b*) in a free end region.
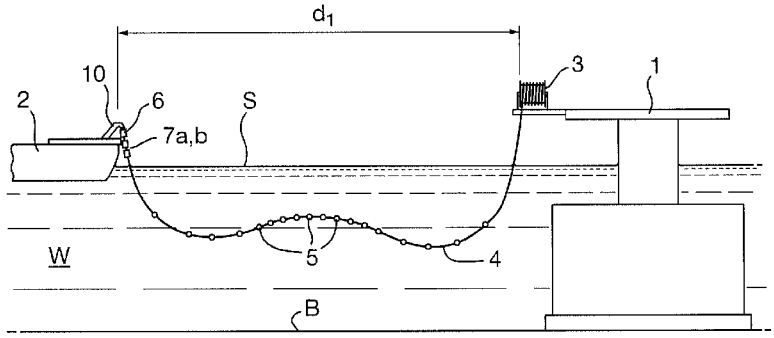
5 Claims, 3 Drawing Sheets