May 24, 1955 J. J. FREEDLAND 2,708,931

SHOCK-THERAPY MOUTH GUARD

Filed Feb. 19, 1953

FIG. 1

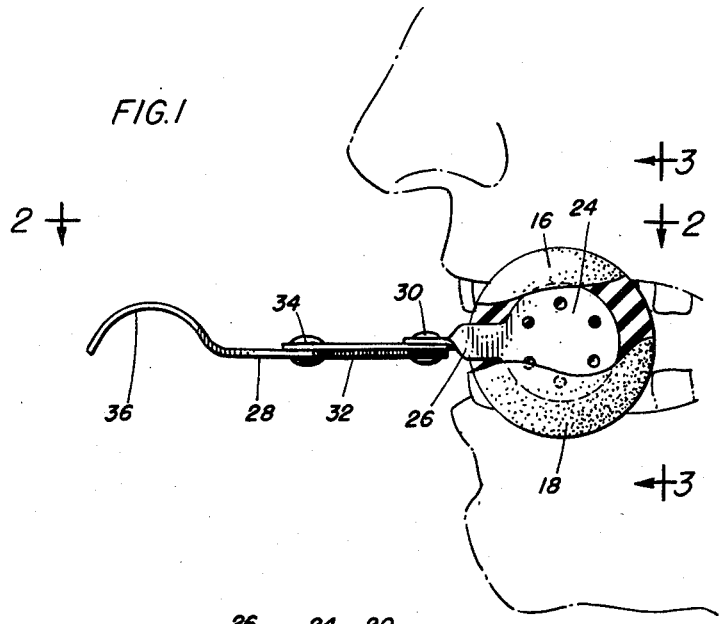

FIG. 2

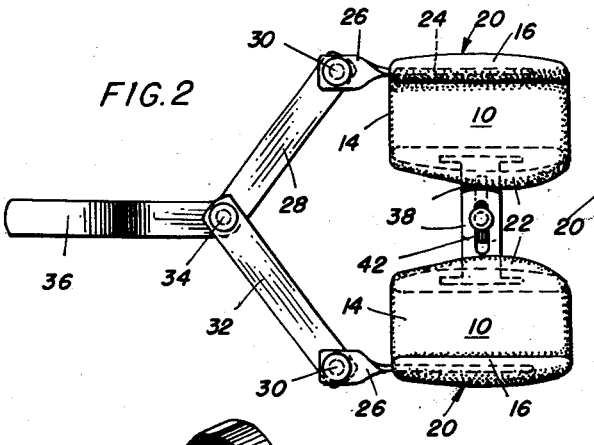

FIG. 3

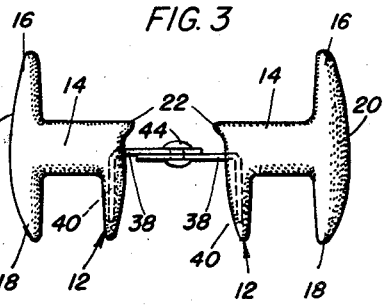

FIG. 4

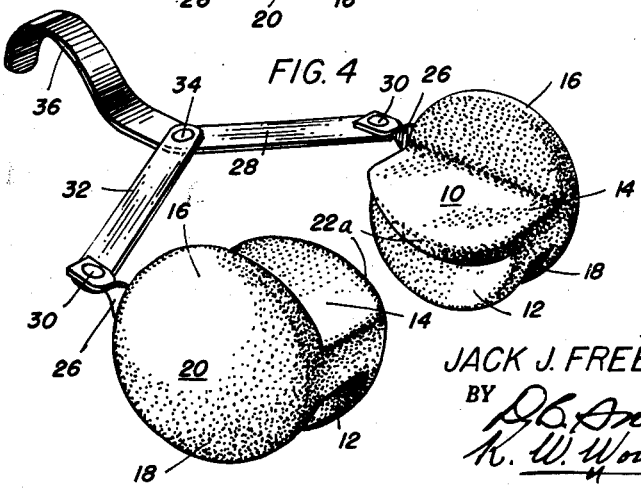

INVENTOR:
JACK J. FREEDLAND
BY D. B. Snyder
R. W. Wonnell
ATT'YS