Oct. 29, 1968

G. W. GOETZE ET AL

3,408,531

STORAGE SYSTEM

Filed June 10, 1966

FIG. 1

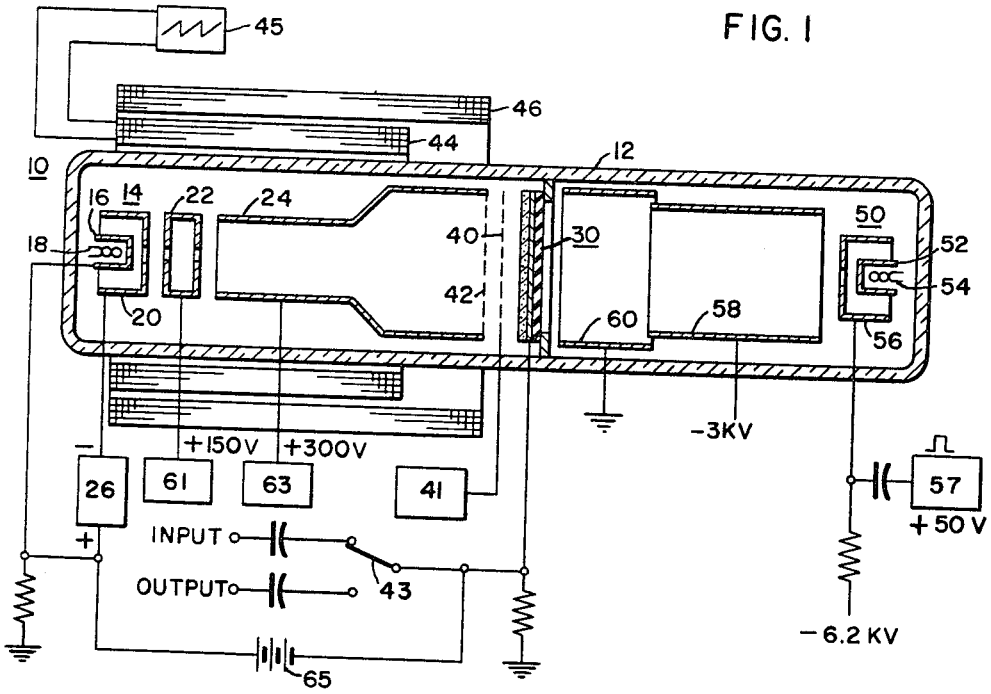

FIG. 2

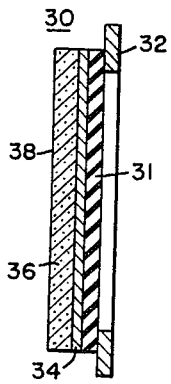

WITNESSES

Wm. B. Sellers

James F. Young

INVENTORS

Gerhard W. Goetze and

Arthur E. Anderson

BY

R. Lewis Sable

ATTORNEY