CHARGED PARTICLE TRAPPING MEANS EMPLOYING A VOLTAGE DIVIDER AND A PLURALITY OF SIMPLE CONDUCTORS TO PRODUCE COMPLEX TRAPPING FIELDS

Filed Oct. 21, 1968 4 Sheets-Sheet 2

FIG. 3

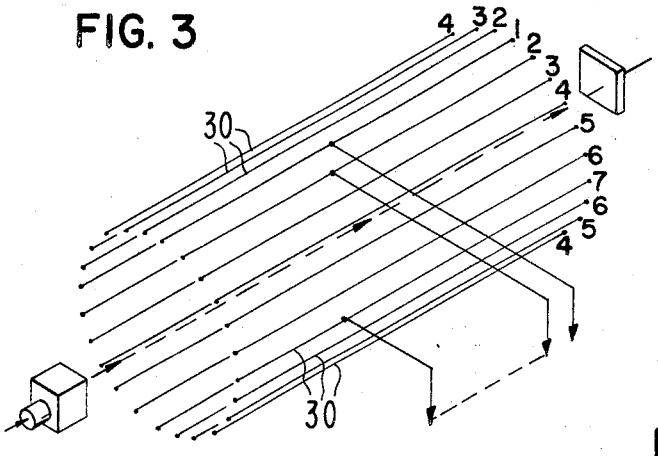

FIG. 3A

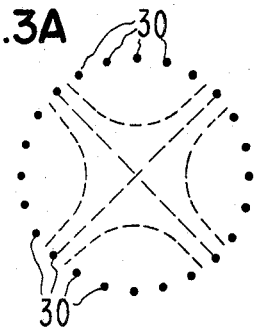

FIG. 3B

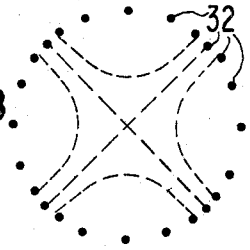

FIG. 4

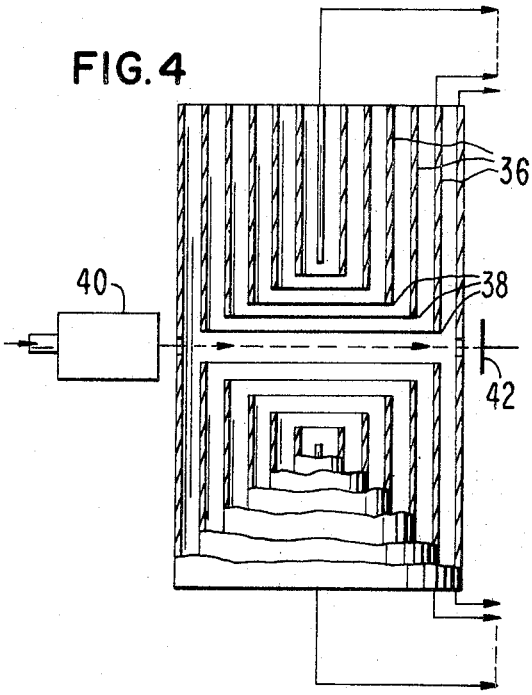

FIG. 5

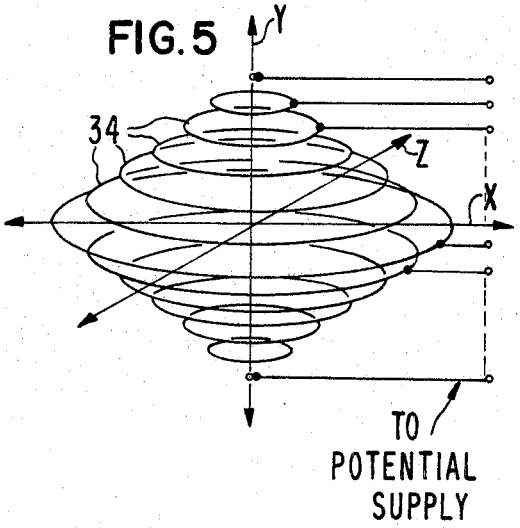

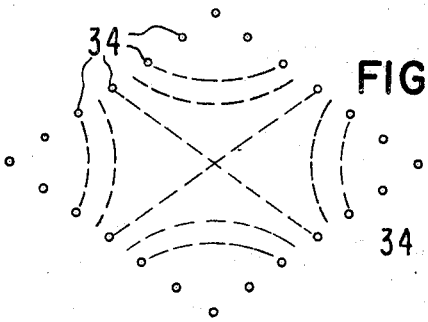

FIG. 5A

INVENTOR.
JAMES T. ARNOLD
BY
Wm J Nolan
ATTORNEY