March 17, 1970 J. T. ARNOLD 3,501,631

CHARGED PARTICLE TRAPPING MEANS EMPLOYING A VOLTAGE DIVIDER AND A PLURALITY OF SIMPLE CONDUCTORS TO PRODUCE COMPLEX TRAPPING FIELDS

Filed Oct. 21, 1968 4 Sheets-Sheet 1

FIG. 1

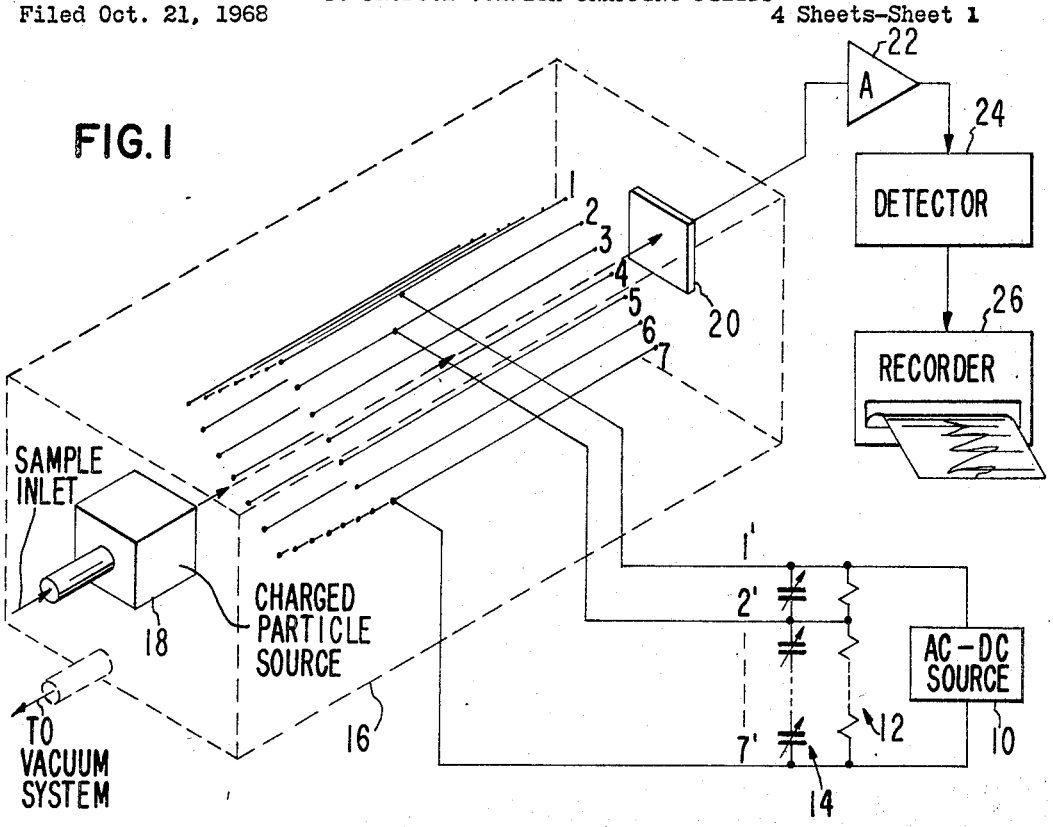

FIG. 2

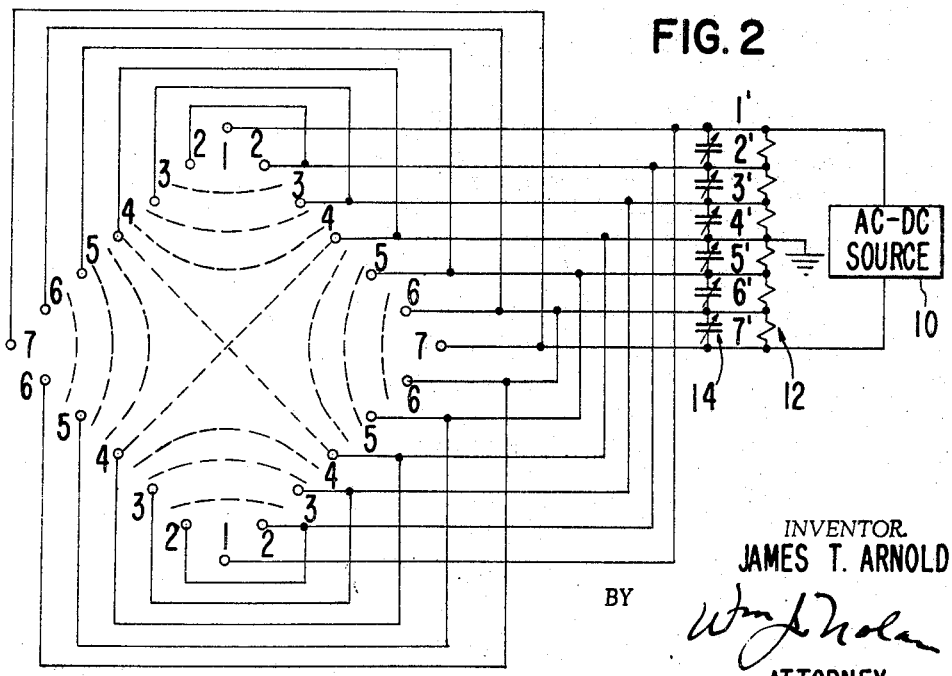

INVENTOR.
JAMES T. ARNOLD

BY

Wm. L. Nolan

ATTORNEY