US006494830B1

(12) **United States Patent**
Wessel

(10) **Patent No.: US 6,494,830 B1**
(45) **Date of Patent: Dec. 17, 2002**

(54) **HANDHELD CONTROLLER FOR MONITORING/USING MEDICAL PARAMETERS**

(75) Inventor: **Paul Wessel**, Delano, MN (US)

(73) Assignee: **Guidance Interactive Technologies, Inc.**, Delano, MN (US)

(*) Notice: Subject to any disclaimer, the term of this patent is extended or adjusted under 35 U.S.C. 154(b) by 0 days.

(21) Appl. No.: **09/884,968**

(22) Filed: **Jun. 21, 2001**

Related U.S. Application Data

(60) Provisional application No. 60/213,422, filed on Jun. 22, 2000.

(51) **Int. Cl.**[7] **A61B 5/00**

(52) **U.S. Cl.** **600/300**; 273/459; 434/235; 600/365; 178/903

(58) **Field of Search** ..... 600/300–301, 600/365, 347, 309–310, 316, 322; 128/903–904; 702/19, 104; 379/106.01, 106.02; 434/235–238, 262; 273/429, 440, 459, 148 B

(56) **References Cited**

U.S. PATENT DOCUMENTS

5,134,391 A		7/1992	Okada	
5,307,263 A		4/1994	Brown	
5,507,288 A	*	4/1996	Böcker et al.	600/300
5,678,571 A		10/1997	Brown	
5,840,020 A		11/1998	Heinonen et al.	
5,857,967 A		1/1999	Frid et al.	
5,876,351 A		3/1999	Rhode	
5,899,855 A		5/1999	Brown	
5,913,310 A		6/1999	Brown	
5,918,603 A		7/1999	Brown	
5,960,403 A		9/1999	Brown	
5,961,451 A	*	10/1999	Reber et al.	600/322
6,295,506 B1	*	9/2001	Heinonen et al.	702/104
6,379,301 B1	*	4/2002	Worthington et al.	600/309

FOREIGN PATENT DOCUMENTS

WO	WO 00/78210 A1	*	12/2000	A61B/5/00

* cited by examiner

Primary Examiner—Max Hindenburg
Assistant Examiner—Michael C Astorino

(57) **ABSTRACT**

The Invention presents a system and method of combining a medical device, a medical testing procedure, in a combination of hardware and software that provide motivation and digital rewards through a hand held video game controller or other hand held computing device.
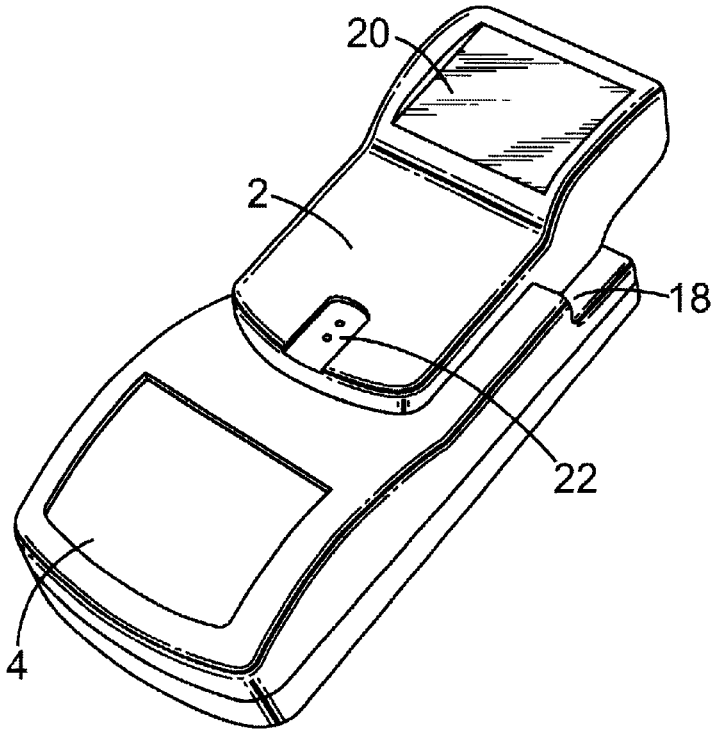
7 Claims, 8 Drawing Sheets