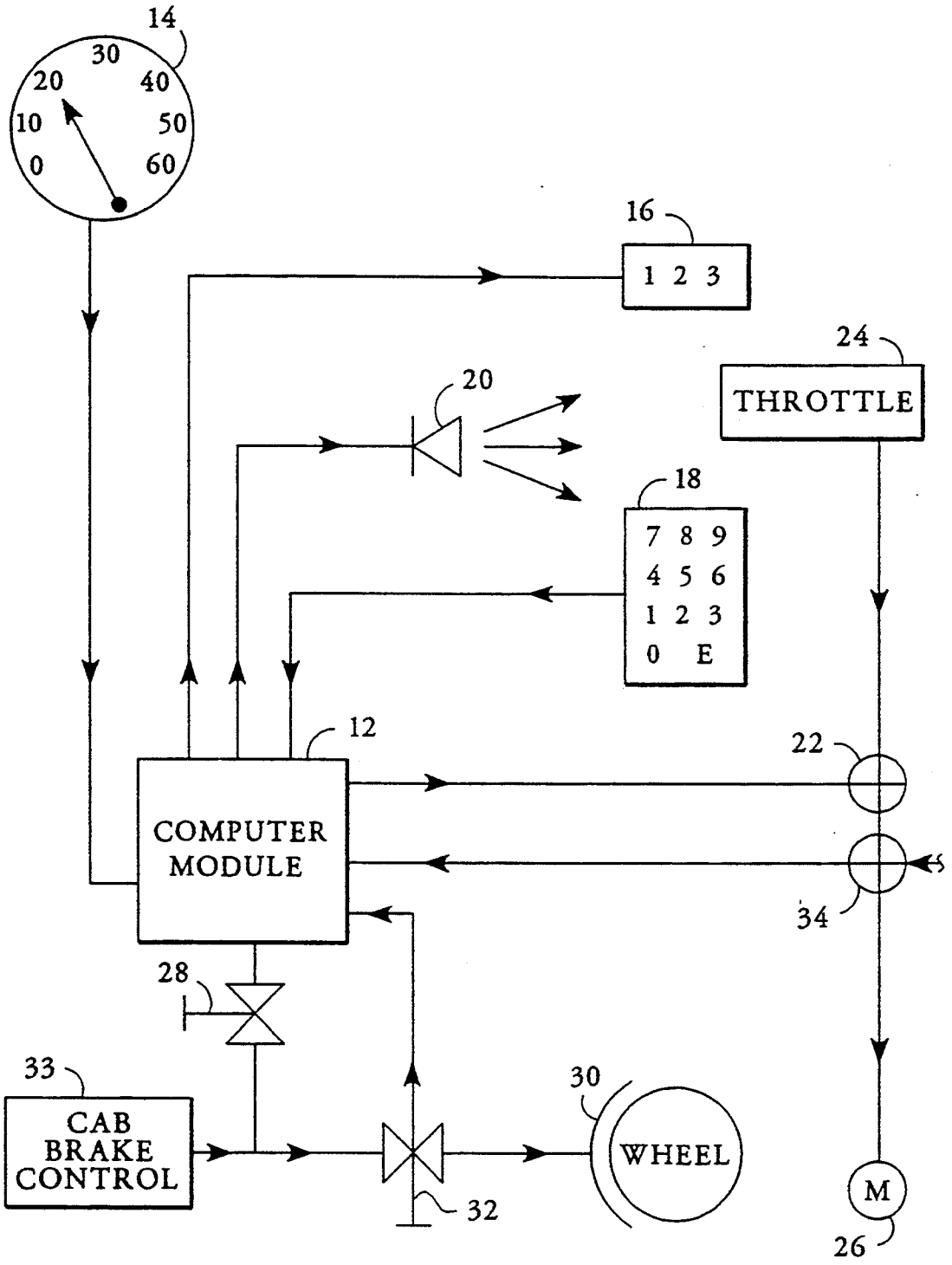
14
30
20
40
10
50
0
60
16
1 2 3
24
THROTTLE
20
18
7 8 9
4 5 6
1 2 3
0 E
12
22
COMPUTER MODULE
34
28
33
CAB BRAKE CONTROL
30
WHEEL
32
M
26

FIG. 1