US006290730B1

(12) **United States Patent**
Pitkin et al.

(10) **Patent No.: US 6,290,730 B1**
(45) **Date of Patent: Sep. 18, 2001**

(54) **ARTIFICIAL FOOT AND ANKLE**

(75) Inventors: **Mark R. Pitkin**, Sharon, MA (US); **John A. Hays**; **Sujatha Srinivasan**, both of Columbus, OH (US); **James M. Colvin**, Hilliard, OH (US)

(73) Assignee: **Ohio Willow Wood Company**, Mount Sterling, OH (US)

(*) Notice: Subject to any disclaimer, the term of this patent is extended or adjusted under 35 U.S.C. 154(b) by 0 days.

(21) Appl. No.: **09/526,367**

(22) Filed: **Mar. 16, 2000**

Related U.S. Application Data

(60) Provisional application No. 60/126,348, filed on Mar. 26, 1999.

(51) **Int. Cl.**[7] **A61F 2/66**
(52) **U.S. Cl.** **623/49**; 623/55
(58) **Field of Search** 623/55, 49, 51, 623/52, 50

(56) **References Cited**

U.S. PATENT DOCUMENTS

26,753		1/1860	Douglass	623/53 X
197,943		12/1877	Osborne	623/53 X
456,206		7/1891	Rowley	623/55
854,510		5/1907	Mahaffey	623/49
1,090,327		3/1914	Milligan	623/53 X
1,219,374	*	3/1917	Carrico	623/55
5,019,109	*	5/1991	Voisin	623/55
5,062,859		11/1991	Naeder	623/55
5,139,525		8/1992	Kristinsson	623/55
5,156,632		10/1992	Wellershaus	623/55
5,376,139		12/1994	Pitkin	623/51
5,800,569		9/1998	Phillips	623/53
5,993,488		11/1999	Phillips	623/55

FOREIGN PATENT DOCUMENTS

308671	*	10/1918	(DE)	623/55
834884	*	3/1952	(DE)	623/49
1134045		11/1968	(GB)	623/55
2110936	*	6/1983	(GB)	623/49
WO 89/05617		6/1989	(WO)	623/53

OTHER PUBLICATIONS

"Synthesis of a cycloidal mechanism of the prosthetic ankle", M.R. Pitkin, *Prosthetic and Orthotics International,* 1996, 20, 159–171.

* cited by examiner

Primary Examiner—Bruce Snow
(74) *Attorney, Agent, or Firm*—Weingarten, Schurgin, Gagnebin & Hayes LLP

(57) **ABSTRACT**

An artificial foot and ankle is provided having a keel component, an ankle component, and a central bumper component interposed between the keel component and the ankle component. The ankle component has a lower surface with a radius of curvature greater than the radius of curvature of an upper surface of the keel component in both a sagittal plane and a frontal plane. The curvature of the central bumper component corresponds to the curvature of the keel component. A holding assembly holds the keel component, the ankle component, and the central bumper component together, with the ankle component capable of rolling motion relative to the keel component in both the sagittal plane and the frontal plane. A dorsiflexion stop assembly may also be provided to control the amount of dorsiflexion.
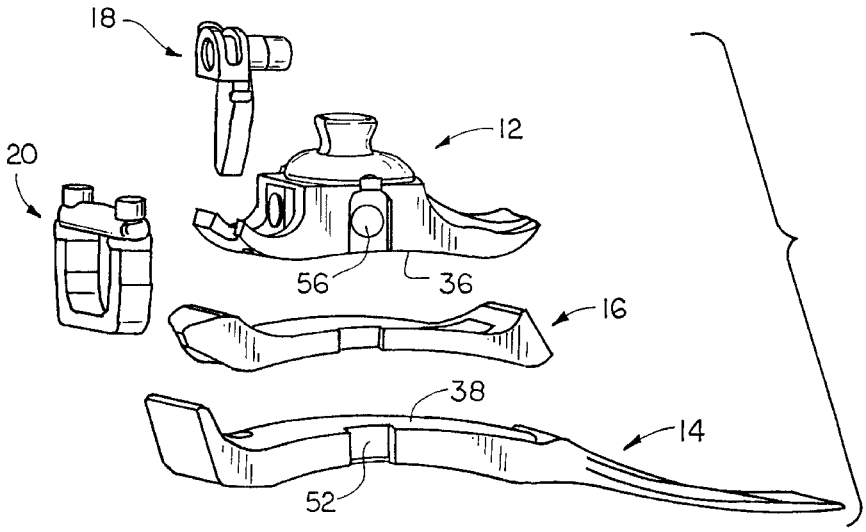
29 Claims, 5 Drawing Sheets