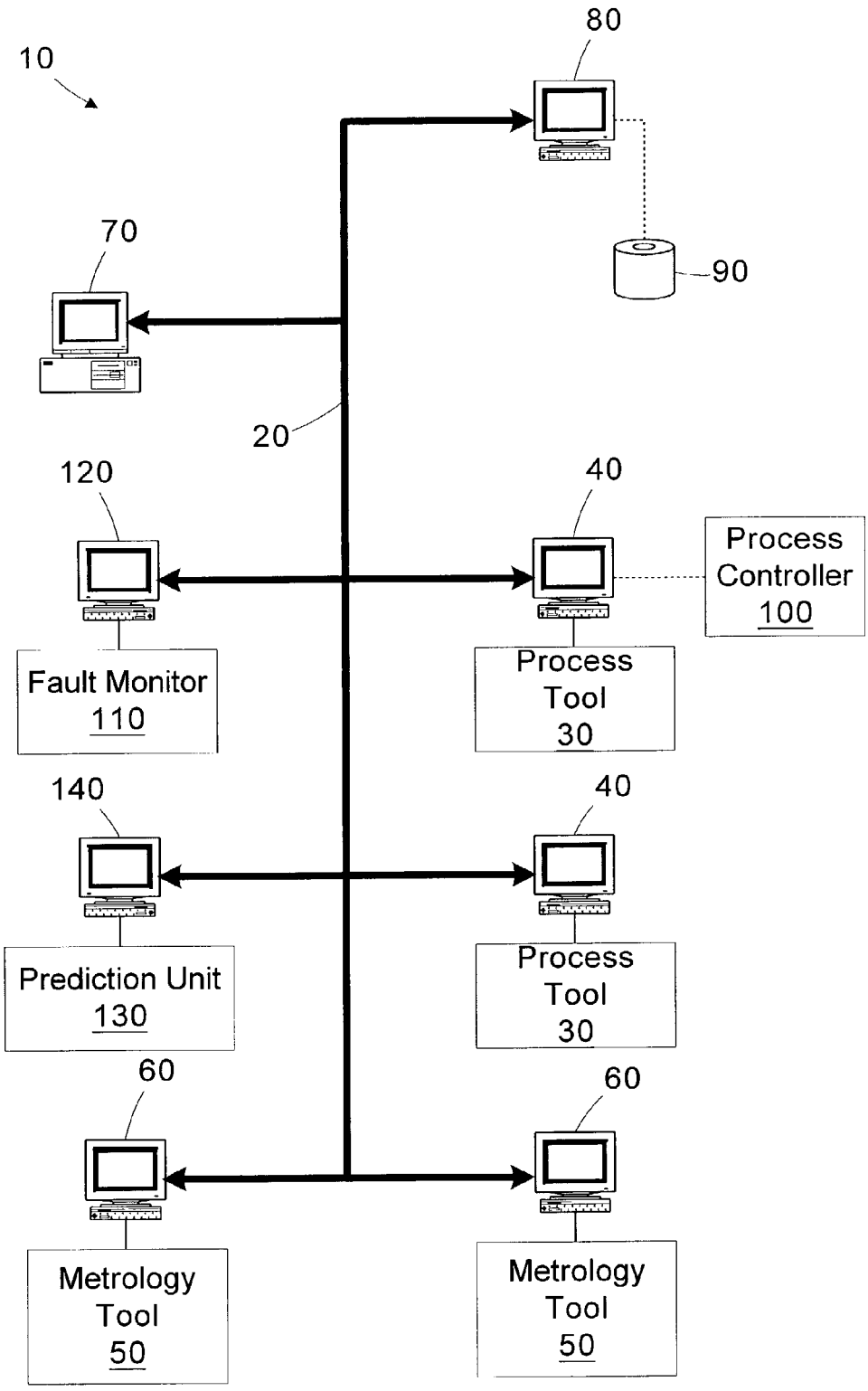
10
80
90
70
20
120
40
Process Controller 100
Fault Monitor 110
Process Tool 30
140
40
Prediction Unit 130
Process Tool 30
60
60
Metrology Tool 50
Metrology Tool 50

Figure 1