US008182030B1

(12) **United States Patent**
Britten

(10) **Patent No.: US 8,182,030 B1**
(45) **Date of Patent: May 22, 2012**

(54) **CHILD CARRIER LUGGAGE ASSEMBLY**

(76) Inventor: **Craig M. Britten**, Sammamish, WA (US)

(*) Notice: Subject to any disclaimer, the term of this patent is extended or adjusted under 35 U.S.C. 154(b) by 148 days.

(21) Appl. No.: **12/760,121**

(22) Filed: **Apr. 14, 2010**

(51) **Int. Cl.**
A47C 13/00 (2006.01)

(52) **U.S. Cl.** **297/129**; 297/118

(58) **Field of Classification Search** 297/118, 297/129
See application file for complete search history.

(56) **References Cited**

U.S. PATENT DOCUMENTS

2,545,336	A	*	3/1951	Binder	280/650
2,843,185	A	*	7/1958	Clem et al.	297/129 X
3,997,213	A	*	12/1976	Smith et al.	297/118
4,290,625	A	*	9/1981	Barriere	297/129 X
4,846,486	A	*	7/1989	Hobson	280/47.25
4,955,517	A	*	9/1990	Maresca	297/129 X
5,016,792	A	*	5/1991	Jay	297/129 X
5,062,557	A	*	11/1991	Mahvi et al.	297/129 X
5,230,450	A	*	7/1993	Mahvi et al.	297/129 X
5,297,708	A	*	3/1994	Carpenter	297/129 X
5,303,975	A	*	4/1994	Asato	297/129
5,318,342	A	*	6/1994	Hale	297/129
5,350,215	A	*	9/1994	DeMars	297/129 X
5,374,073	A		12/1994	Hung-Hsin	
5,409,291	A	*	4/1995	Lamb et al.	297/129
5,499,760	A	*	3/1996	Pielocik	297/129 X
5,507,508	A	*	4/1996	Liang	280/37
5,695,246	A	*	12/1997	Tsai	297/335
5,779,112	A	*	7/1998	Krulik	297/129 X
5,899,467	A	*	5/1999	Henkel	297/129 X
5,941,352	A	*	8/1999	Lee	190/11
5,957,349	A	*	9/1999	Krulik	297/129 X
5,975,389	A	*	11/1999	Braun et al.	297/129 X
5,988,657	A	*	11/1999	Henkel	297/129 X
6,048,023	A	*	4/2000	Lampton	297/129
6,145,716	A	*	11/2000	Caicedo	297/129 X
6,213,265	B1	*	4/2001	Wang	190/11
6,217,113	B1	*	4/2001	Knatz	297/118
6,241,313	B1		6/2001	Lenz et al.	
D459,883	S		7/2002	Worrell et al.	
6,471,019	B1	*	10/2002	Miller	190/11
6,547,324	B1	*	4/2003	Ammann, Jr.	297/129
6,644,447	B2	*	11/2003	Pohl	190/8
6,932,427	B2		8/2005	Tamura	
6,986,445	B1	*	1/2006	Stockman	297/129 X
6,997,507	B2	*	2/2006	Rhee	297/129
7,040,635	B1	*	5/2006	Remole	280/47.18
7,097,017	B1	*	8/2006	LaCrosse et al.	190/8
7,213,692	B2	*	5/2007	Wang et al.	190/8
7,350,857	B2	*	4/2008	Bishop	297/129
7,354,049	B2		4/2008	Schmidt	
7,523,949	B1	*	4/2009	Galfin	297/129 X
7,757,912	B1	*	7/2010	Fabro	297/129 X
7,857,328	B1	*	12/2010	Boss	280/47.25
7,987,955	B2	*	8/2011	Puchalski	190/18 A
2004/0021353	A1		2/2004	Lozano et al.	
2005/0110231	A1		5/2005	Brown	
2007/0089952	A1		4/2007	Herbst et al.	
2008/0179358	A1	*	7/2008	Redzisz et al.	297/129 X
2009/0159385	A1		6/2009	Poissant et al.	

* cited by examiner

Primary Examiner — Rodney B White

(57) **ABSTRACT**

A child carrier luggage assembly for facilitating transportation of a child while traveling includes a wheeled luggage bag and a seat assembly coupled to the front of the luggage bag. The seat assembly includes a seat member hingedly coupled to the front of the luggage bag and a strap assembly coupled between the seat member and the front of the luggage bag. A pedestal member is hingedly coupled to the seat member such that the pedestal member extends outwardly from the seat member to support the seat member when the seat member is in an open position. Alternatively, the seat assembly is coupled to a panel attached to the wheeled luggage bag using a harness assembly.
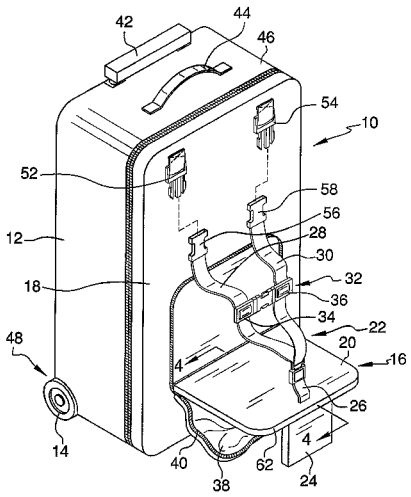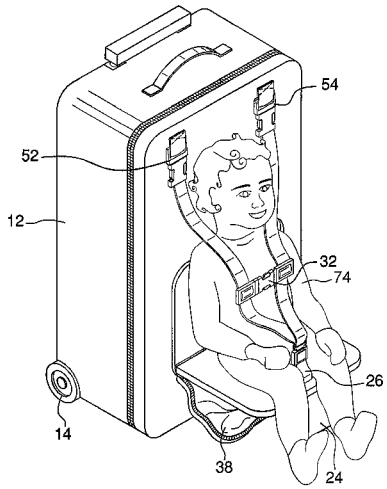
18 Claims, 7 Drawing Sheets