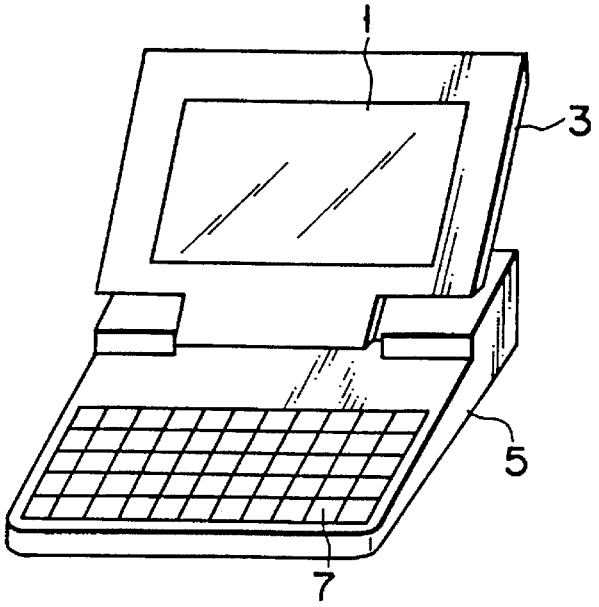

(PRIOR ART)

FIG. 1

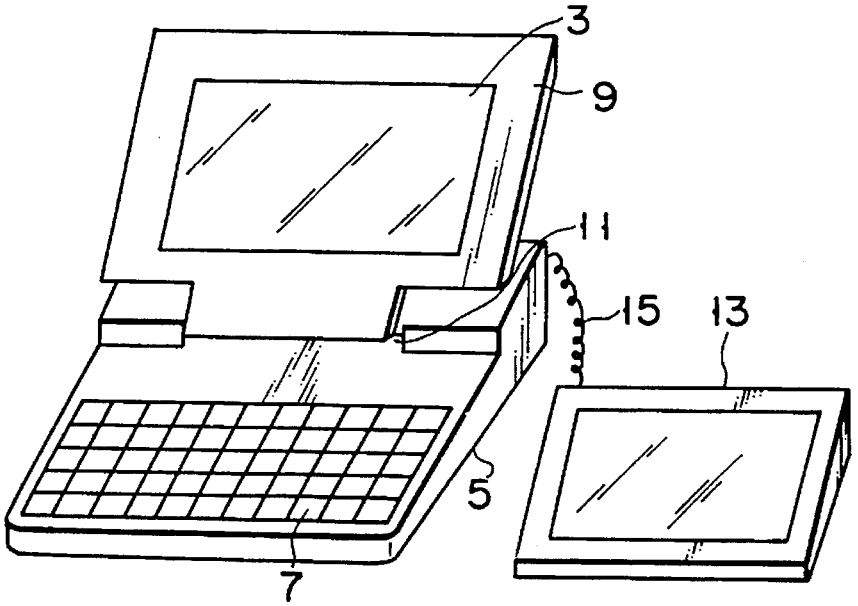

(PRIOR ART)

FIG. 2