T. A. EDISON.

SPEAKING TELEGRAPH.

No. 474,230. Patented May 3, 1892.

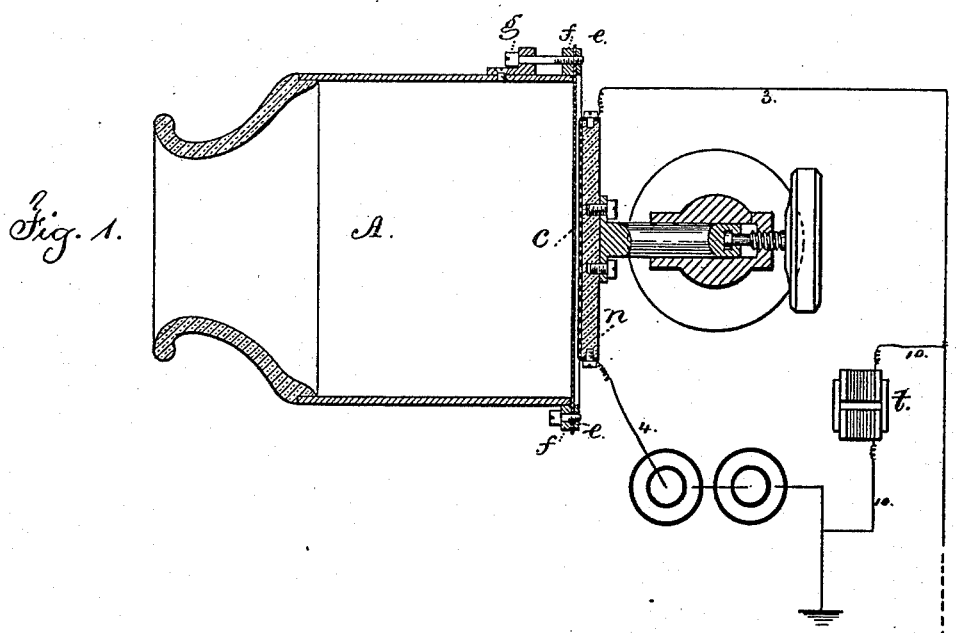

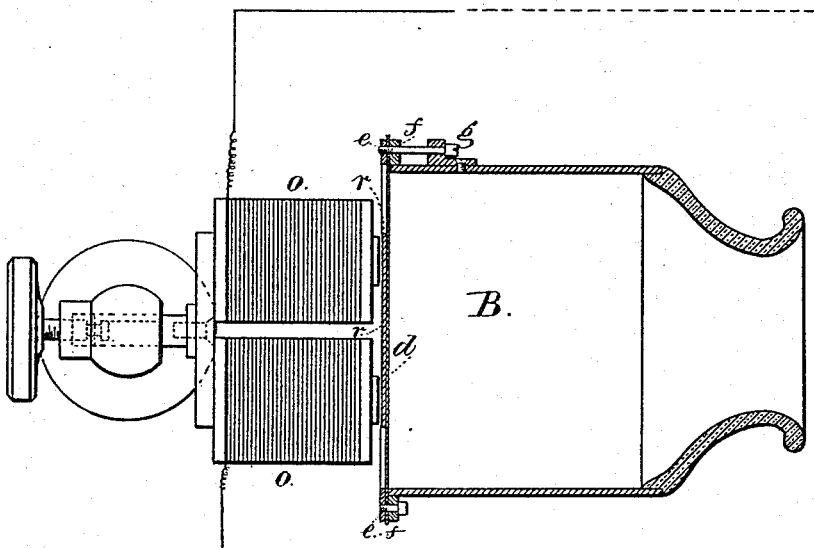

Witnesses,

Chas. H. Smith

Geo. T. Pinckney

Inventor.

Thomas A. Edison

per Lemuel W. Serrell

Atty.

THE NORRIS PETERS CO., PHOTO-LITHO., WASHINGTON, D. C.