US009364230B2

(12) **United States Patent**
Shelton, IV et al.

(10) **Patent No.: US 9,364,230 B2**
(45) **Date of Patent: Jun. 14, 2016**

(54) **SURGICAL STAPLING INSTRUMENTS WITH ROTARY JOINT ASSEMBLIES**

(75) Inventors: **Frederick E. Shelton, IV**, Hillsboro, OH (US); **Jeffrey S. Swayze**, Hamilton, OH (US); **Chester O. Baxter, III**, Loveland, OH (US)

(73) Assignee: **Ethicon Endo-Surgery, LLC**, Guaynabo, PR (US)

(*) Notice: Subject to any disclaimer, the term of this patent is extended or adjusted under 35 U.S.C. 154(b) by 853 days.

(21) Appl. No.: **13/536,335**

(22) Filed: **Jun. 28, 2012**

(65) **Prior Publication Data**

US 2014/0001236 A1 Jan. 2, 2014

(51) **Int. Cl.**

A61B 17/068	(2006.01)
B25J 17/00	(2006.01)
A61B 17/072	(2006.01)
A61M 39/00	(2006.01)
A61M 39/10	(2006.01)
A61B 17/00	(2006.01)
A61B 17/29	(2006.01)

(52) **U.S. Cl.**

CPC ***A61B 17/07207*** (2013.01); ***A61M 39/00*** (2013.01); ***A61M 39/1055*** (2013.01); *A61B 2017/0046* (2013.01); *A61B 2017/00309* (2013.01); *A61B 2017/00314* (2013.01); *A61B 2017/00398* (2013.01); *A61B 2017/00477* (2013.01); *A61B 2017/00876* (2013.01); *A61B 2017/2908* (2013.01); *A61B 2017/2927* (2013.01); *A61B 2017/2929* (2013.01); *A61M 2039/1061* (2013.01); *Y10T 29/49826* (2015.01); *Y10T 74/20329* (2015.01)

(58) **Field of Classification Search**

None

See application file for complete search history.

(56) **References Cited**

U.S. PATENT DOCUMENTS

66,052	A	6/1867	Smith
662,587	A	11/1900	Blake
670,748	A	3/1901	Weddeler
951,393	A	3/1910	Hahn
1,306,107	A	6/1919	Elliott
1,314,601	A	9/1919	McCaskey
1,677,337	A	7/1928	Grove
1,794,907	A	3/1931	Kelly
2,037,727	A	4/1936	La Chapelle
2,132,295	A	10/1938	Hawkins

(Continued)

FOREIGN PATENT DOCUMENTS

AU	2008207624	A1	3/2009
AU	2010214687	A1	9/2010

(Continued)

OTHER PUBLICATIONS

International Search Report for PCT/US2013/047075, dated Jul. 29, 2014 (3 pages).

(Continued)

Primary Examiner — Gloria R Weeks
Assistant Examiner — Chinyere Rushing-Tucker

(57) **ABSTRACT**

A rotary support joint assembly for coupling a first portion of a surgical instrument to a second portion of a surgical instrument. In various forms the joint assembly includes a first annular race in the first portion and a second annular race in the second portion. The second race is configured for substantial registration with the first annular race when the second portion is joined with the first portion. A ring-like bearing is supported within the registered first and second annular races.
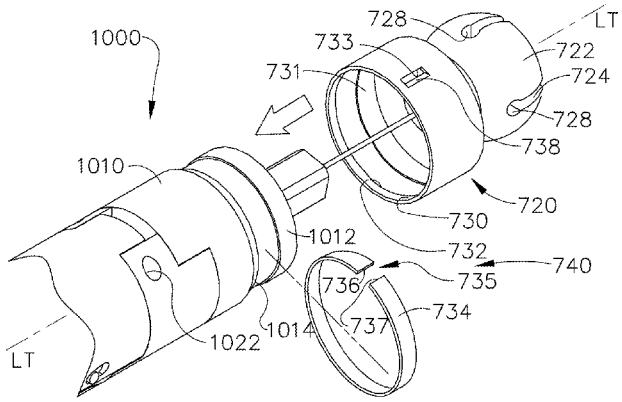
18 Claims, 126 Drawing Sheets