June 28, 1966 W. L. SHELTON 3,257,830

WASHING MACHINE

Filed July 6, 1964 3 Sheets-Sheet 1

FIG. 1

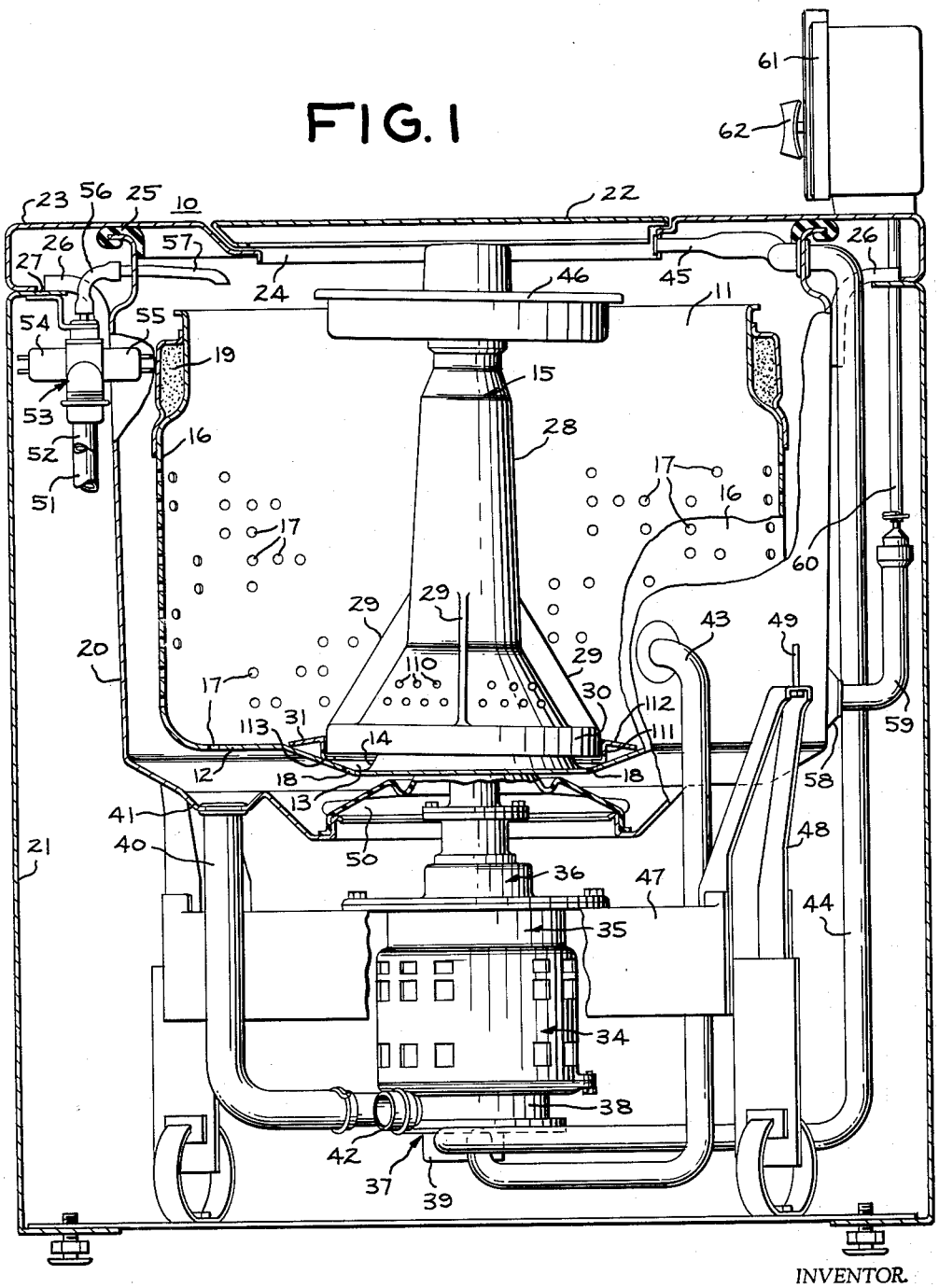

INVENTOR.
WINSTON L. SHELTON
BY Sheridan E. Begg
HIS ATTORNEY