EMBOSSED ROLLER DEVICE FOR SIMULATING NATURAL STONES

Filed Feb. 18, 1963 2 Sheets-Sheet 2

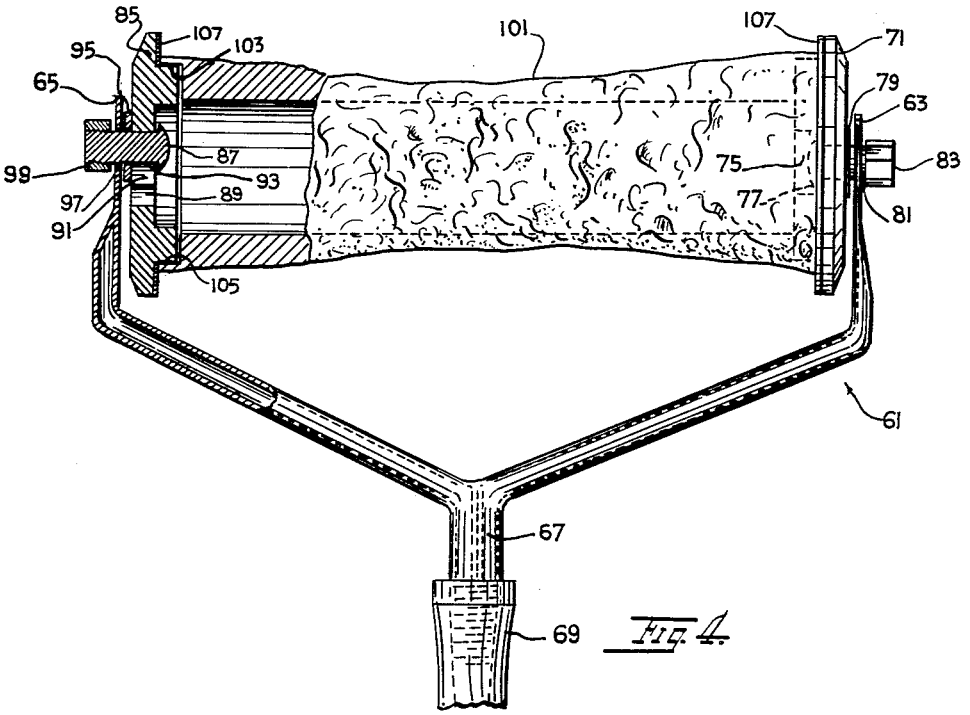

Fig. 4.

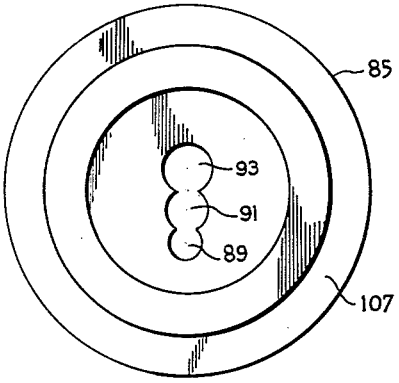

Fig. 5.

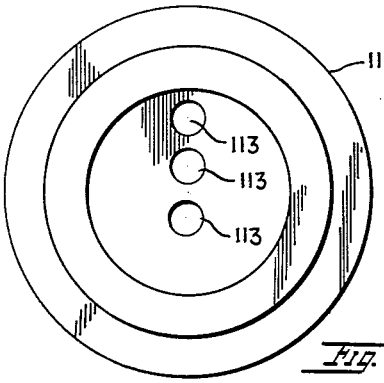

Fig. 6.

INVENTOR.
EDWARD JUCHNIEWICZ
BY
Otto F. Polachek
ATTORNEY