July 1, 1941. C. G. ABBOT 2,247,830

SOLAR HEATER

Filed July 7, 1938 2 Sheets-Sheet 1

Fig. 1.

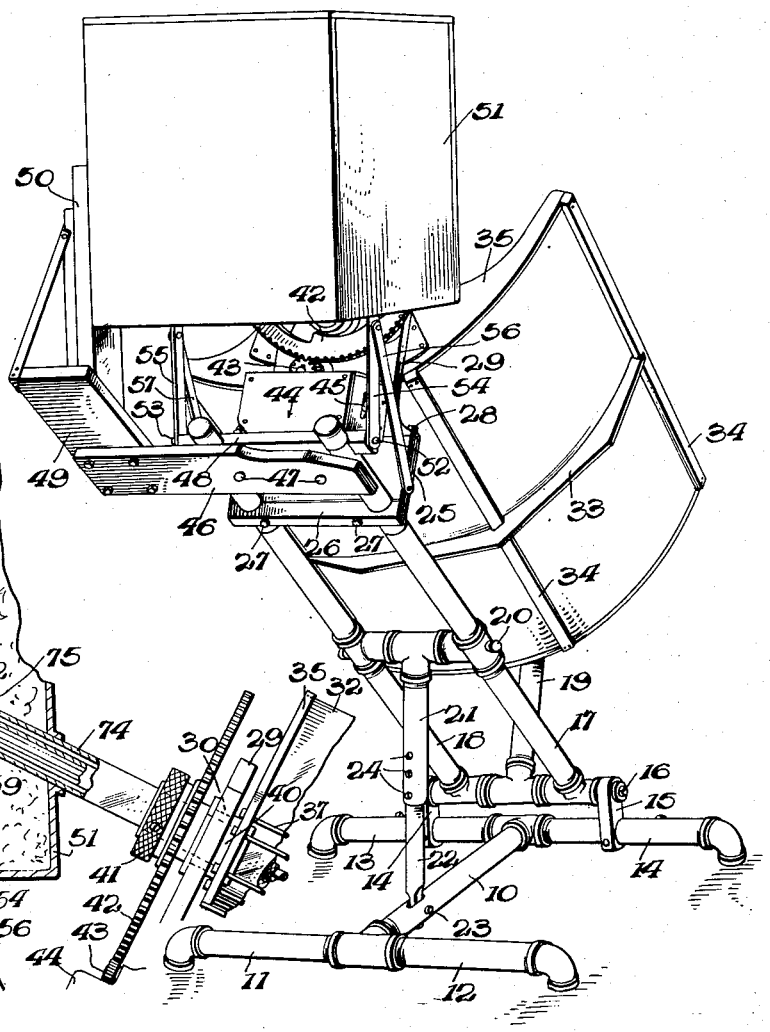

Fig. 3.

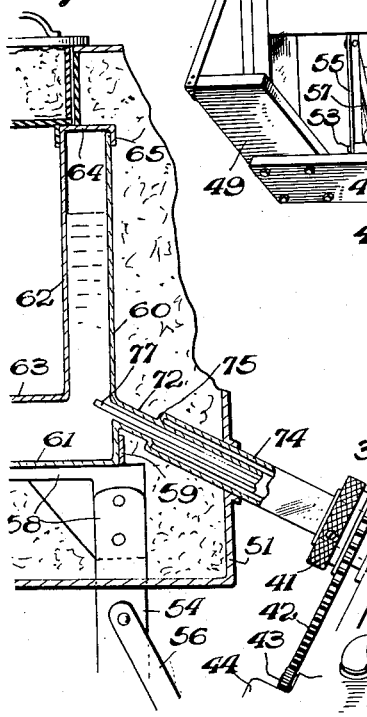

Inventor

Charles G. Abbot.

By Cameron, Kerkam & Sutton.

Attorneys