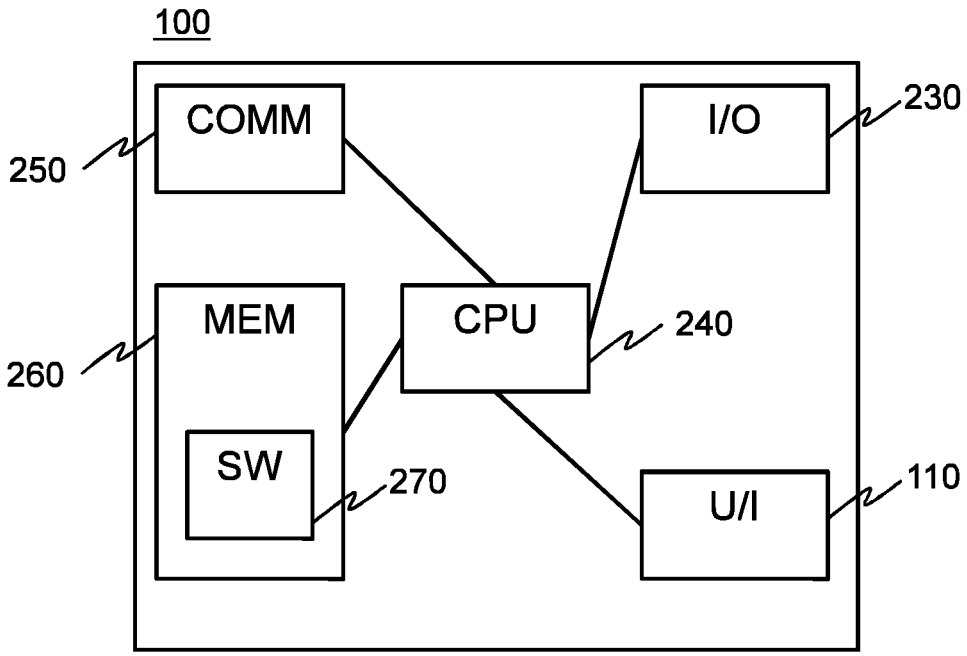
100
COMM
I/O
230
250
MEM
CPU
240
260
SW
270
U/I
110

Fig. 12

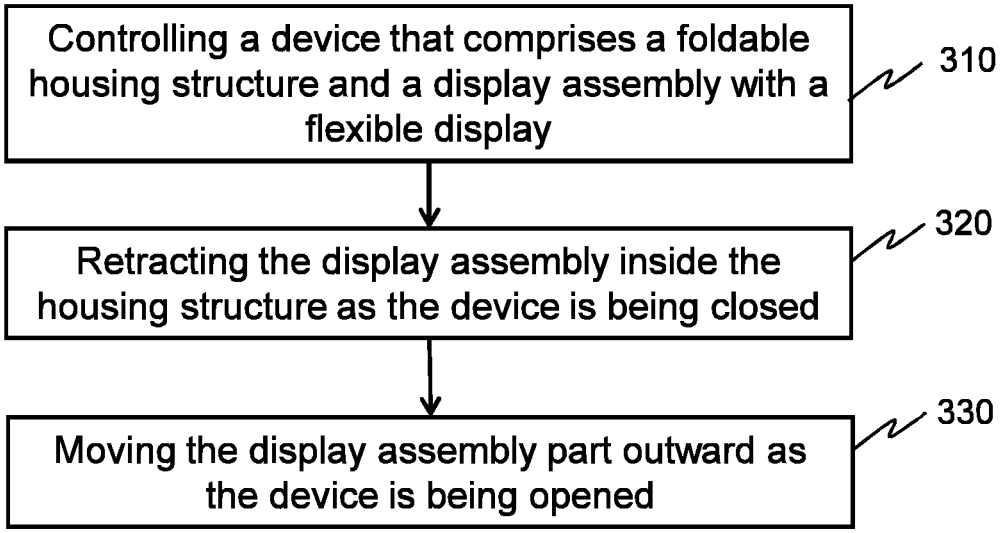
Controlling a device that comprises a foldable housing structure and a display assembly with a flexible display
310
Retracting the display assembly inside the housing structure as the device is being closed
320
Moving the display assembly part outward as the device is being opened
330

Fig. 13