US005238130A

United States Patent [19]

Marques et al.

[11] Patent Number: 5,238,130

[45] Date of Patent: Aug. 24, 1993

[54] CLOSURE FOR A CONTAINER

[75] Inventors: **Rui M. M. Marques**, Mississauga; **Terrance Reid**, Thornhill; **Manuel D'Oliveira**, Etobicoke; **Joseph Marques**, Weston, all of Canada

[73] Assignee: **9866143 Ontario Inc.**, Toronto, Canada

[21] Appl. No.: **863,664**

[22] Filed: **Apr. 6, 1992**

[51] **Int. Cl.**[5] **B65D 55/02**

[52] **U.S. Cl.** **215/216**; 215/211; 215/217; 215/221

[58] **Field of Search** 215/203, 206, 211, 213, 215/214, 216, 217, 221, 330, 334, 343, 344

[56] **References Cited**

U.S. PATENT DOCUMENTS

3,360,147	12/1967	Schaefer .	
3,698,584	10/1972	Miller .	
3,747,793	7/1973	Wassilieff	215/334 X
3,826,395	7/1974	Montgomery	215/221
3,831,797	8/1974	Stevens, Jr. .	
3,841,514	10/1974	Montgomery et al.	215/216
3,857,508	12/1974	LaBarge et al. .	
3,884,379	5/1975	Landen .	
3,891,110	6/1975	Gach .	
3,917,097	11/1975	Uhlig .	
3,924,769	12/1975	Fillmore .	
3,941,268	3/1976	Owens et al. .	
3,944,101	3/1976	Landen et al.	215/216
3,949,893	4/1976	Uhlig	215/216
3,951,290	4/1976	Montgomery .	
3,958,708	5/1976	Le Brun, Jr. .	
3,984,021	10/1976	Uhlig .	
3,989,152	11/1976	Julian .	
3,993,208	11/1976	Ostrowsky	215/216
3,993,209	11/1976	Julian .	
4,116,351	9/1978	Uhlig	215/216
4,117,945	10/1978	Mumford	215/216
4,134,513	1/1979	Mumford	215/216
4,138,028	2/1979	Price et al. .	
4,213,534	7/1980	Montgomery	215/216
4,270,664	6/1981	Buono .	
4,280,631	7/1981	Lohrman .	
4,351,442	9/1982	Summers	215/216

FOREIGN PATENT DOCUMENTS

919104	1/1973	Canada .	
943494	3/1974	Canada .	
966433	4/1975	Canada .	
1023299	12/1977	Canada .	
1154369	8/1960	Fed. Rep. of Germany .	
2952778	2/1981	Fed. Rep. of Germany .	
9004546	5/1990	PCT Int'l Appl.	215/214

Primary Examiner—Allan N. Shoap
Assistant Examiner—Vanessa Caretto
Attorney, Agent, or Firm—Bereskin & Parr

[57] **ABSTRACT**

A closure is provided for a container having an externally threaded neck and a plurality of locking teeth. The closure has a first outer side wall, a second inner side wall, and projections within the outer side wall for engaging the locking teeth of the container, to prevent removal by children and the like. The outer side wall can be distorted to displace the locking projections, for opening the container. For forming a seal with the neck of a container, one or both of a textured finish on an annular sealing surface within the second inner side wall, and an internal sealing lip are provided. This eliminates the requirement for a separate sealing liner.
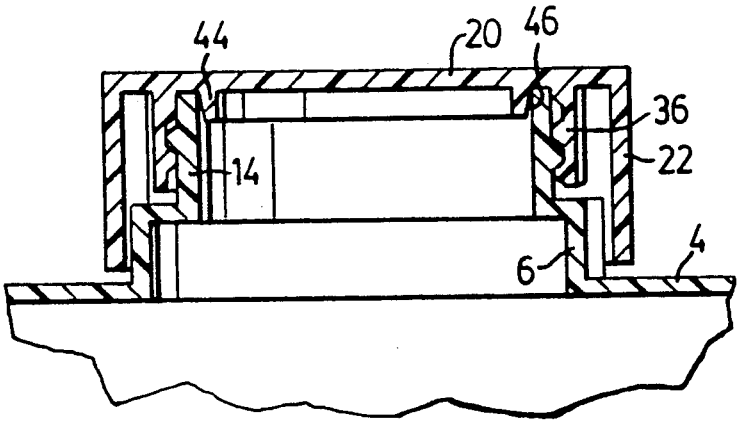
22 Claims, 2 Drawing Sheets