US007837730B2

(12) **United States Patent**
Cumming et al.

(10) **Patent No.: US 7,837,730 B2**
(45) **Date of Patent: *Nov. 23, 2010**

(54) **FLOATING OPTIC ACCOMMODATING INTRAOCULAR LENS**

(75) Inventors: **J. Stuart Cumming**, Laguna Beach, CA (US); **Steven J. Dell**, Austin, TX (US); **Jonathan R. Soiseth**, Pomona, CA (US)

(73) Assignee: **C & C International Limited**, Dublin (IE)

(*) Notice: Subject to any disclaimer, the term of this patent is extended or adjusted under 35 U.S.C. 154(b) by 261 days.

This patent is subject to a terminal disclaimer.

(21) Appl. No.: **11/360,019**

(22) Filed: **Feb. 21, 2006**

(65) **Prior Publication Data**

US 2007/0198084 A1 Aug. 23, 2007

(51) **Int. Cl.**
A61F 2/16 (2006.01)

(52) **U.S. Cl.** **623/6.37**; 623/6.38; 623/6.4; 623/6.44; 623/6.46

(58) **Field of Classification Search** ..... None
See application file for complete search history.

(56) **References Cited**

U.S. PATENT DOCUMENTS

4,174,543	A	11/1979	Kelman
4,244,060	A	1/1981	Hoffer
4,254,509	A	3/1981	Tennant
4,254,510	A	3/1981	Tennant
4,298,996	A	11/1981	Barnet
4,304,012	A	12/1981	Richard
4,409,691	A	10/1983	Levy
4,424,597	A	1/1984	Schlegel
4,441,217	A	4/1984	Cozean, Jr.
4,477,931	A	10/1984	Kelman
4,573,998	A	3/1986	Mazzocco
4,585,457	A	4/1986	Kalb
4,605,411	A	8/1986	Fedorov et al.
4,629,462	A	12/1986	Feaster
4,664,666	A	5/1987	Barrett
4,673,406	A	6/1987	Schlegel
4,704,123	A	11/1987	Smith
4,718,904	A	1/1988	Thornton
4,738,680	A	4/1988	Herman

(Continued)

FOREIGN PATENT DOCUMENTS

EP	0208546	A	1/1987

(Continued)

OTHER PUBLICATIONS

Archimede Busacca, Ciliary Muscle Physiology Studied by Gonioscopy, Annals of Oculistics, vol. CLXXXVIII, Jan. 1955 (English Translation).

(Continued)

Primary Examiner—David H Willse
Assistant Examiner—Javier G Blanco
(74) *Attorney, Agent, or Firm*—Orrick, Herrington & Sutcliffe LLP

(57) **ABSTRACT**

An accommodating intraocular lens comprising a flexible body, a flexible optic which is moveable anteriorly and posteriorly relative to the lens body, and a weakened portion connecting the optic to the body. The body may have extending centration and fixation loops on its distal ends.
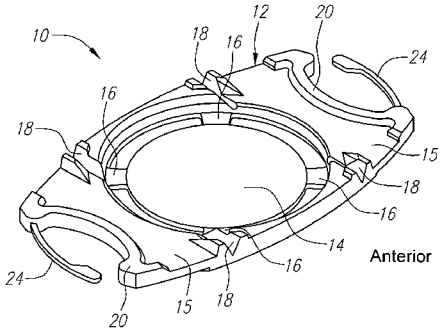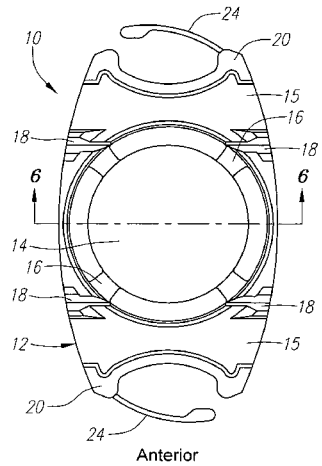
6 Claims, 2 Drawing Sheets