US006129430A

United States Patent [19]

Wu

[11] **Patent Number: 6,129,430**

[45] **Date of Patent: Oct. 10, 2000**

[54] **STYLUS REMOVAL MECHANISM**

[75] Inventor: **Yaz-Tzung Wu**, Taipei, Taiwan

[73] Assignee: **Inventec Corp.**, Taiwan

[21] Appl. No.: **09/324,739**

[22] Filed: **Jun. 3, 1999**

[51] **Int. Cl.**[7] **A47B 97/00**

[52] **U.S. Cl.** **312/223.2**; 178/19.01

[58] **Field of Search** 312/223.1, 223.2, 312/215, 222, 319.1; 178/18.03, 19.01; 361/683; 70/58, 162

[56] **References Cited**

U.S. PATENT DOCUMENTS

4,927,986	5/1990	Daly	178/19.01
5,049,862	9/1991	Dao et al.	178/18.03 X
5,077,991	1/1992	Stickel et al.	70/58
5,180,891	1/1993	Trumbo	178/19.01
5,319,519	6/1994	Sheppard et al.	312/319.1 X
5,555,157	9/1996	Moller et al.	312/223.2 X
5,574,625	11/1996	Ohgami et al.	312/223.2 X
5,649,750	7/1997	Ishii et al.	312/223.2
5,703,626	12/1997	Itoh et al.	178/19.01 X
5,823,644	10/1998	Suh et al.	312/223.2
5,870,283	2/1999	Maeda et al.	70/58 X

FOREIGN PATENT DOCUMENTS

91/17493 11/1991 WIPO .

Primary Examiner—Peter M. Cuomo
Assistant Examiner—James O. Hansen
Attorney, Agent, or Firm—Raymond Sun

[57] **ABSTRACT**

A portable computing device has a first housing, and a second housing hingedly coupled to the first housing. The second housing having an interior that stores a stylus, and which houses a stylus removal mechanism in a manner such that manipulation of the stylus removal mechanism simultaneously releases the first housing from the second housing and removes the stylus from the second housing.
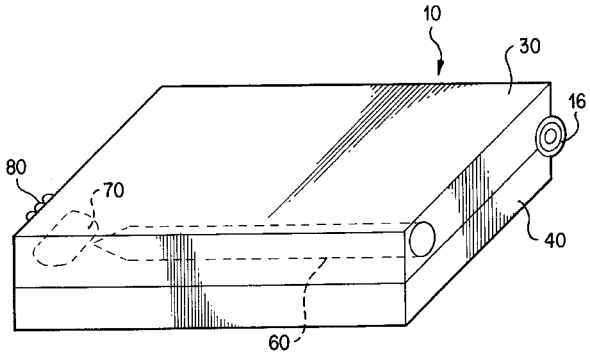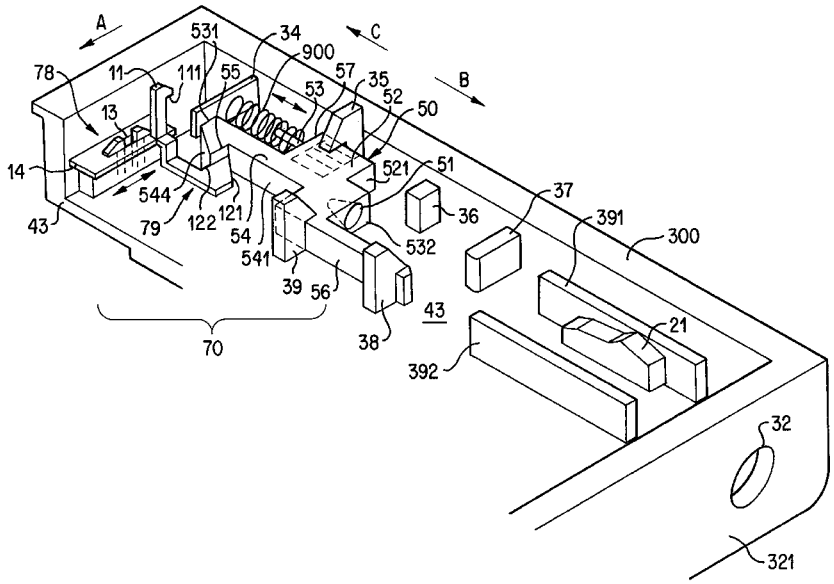
16 Claims, 7 Drawing Sheets