Aug. 24, 1948. W. R. HOLT Re. 23,030

EDUCATIONAL DEVICE

Original Filed June 29, 1944

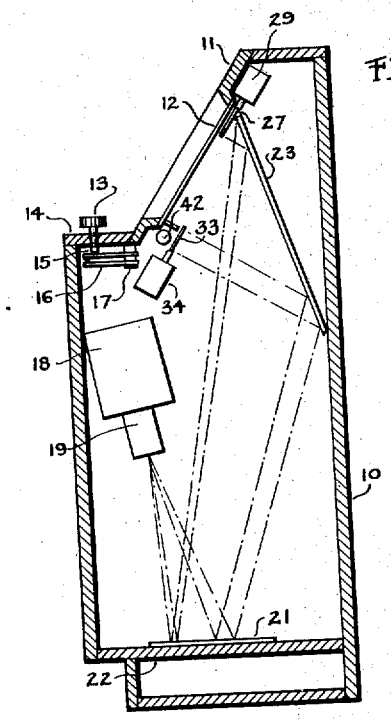

Fig. 1

Fig. 2

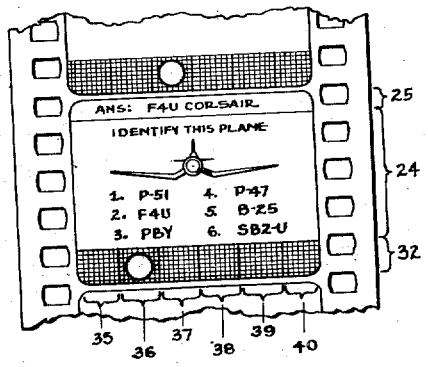

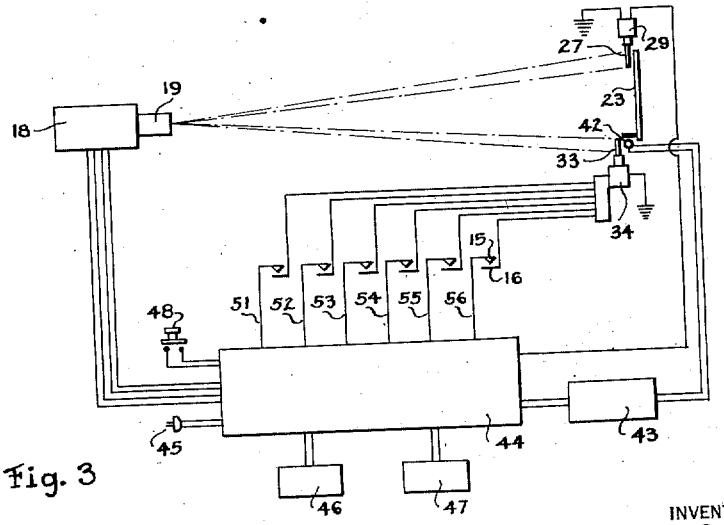

Fig. 3

INVENTOR
Wendell R. Holt
BY W. Glenn Jones
ATTORNEY